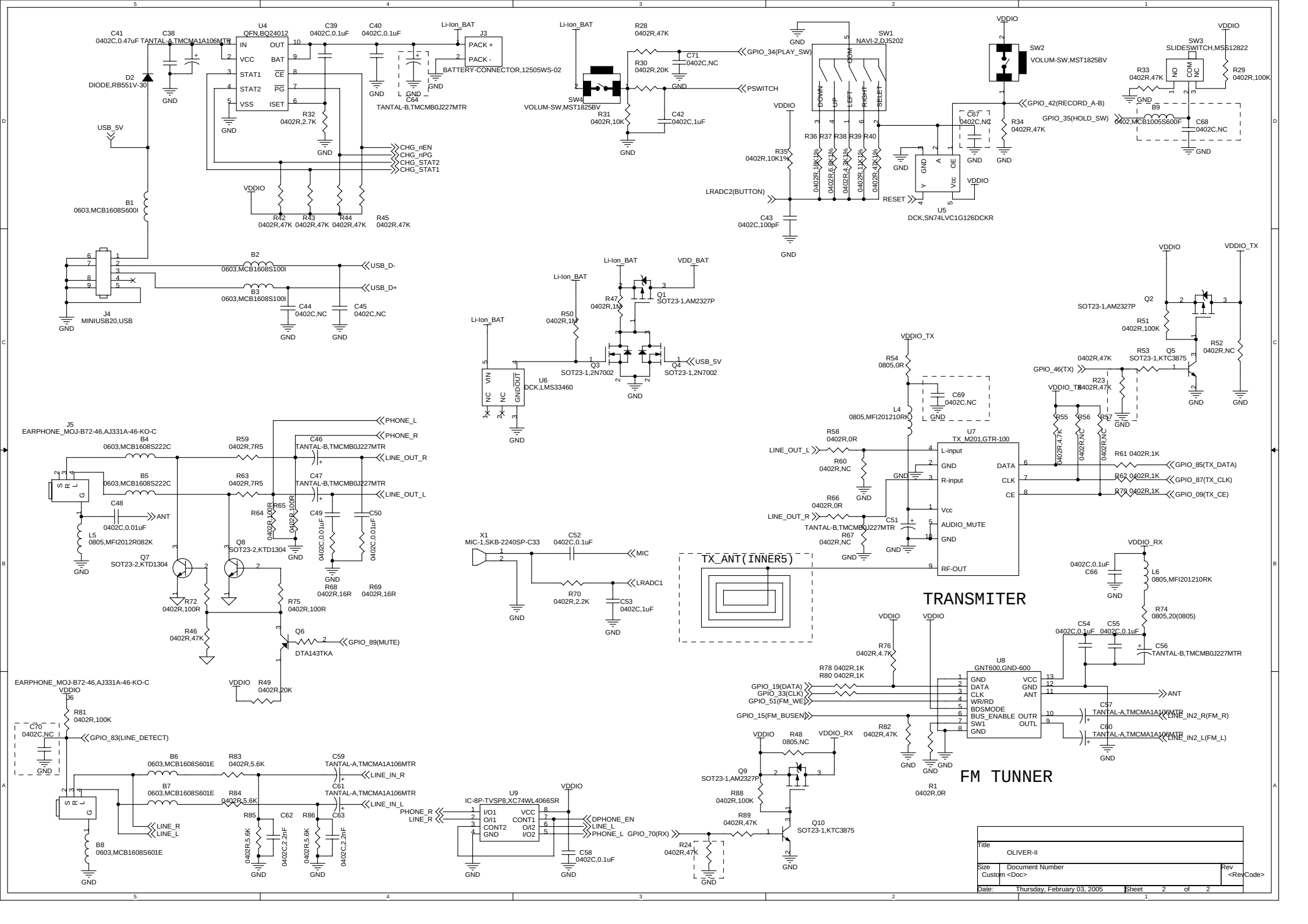

Title	OLIVER-II	
Size Custom	Document Number <Doc>	Rev <RevCode>
Date: Thursday, February 03, 2005	Sheet 2 of 2	