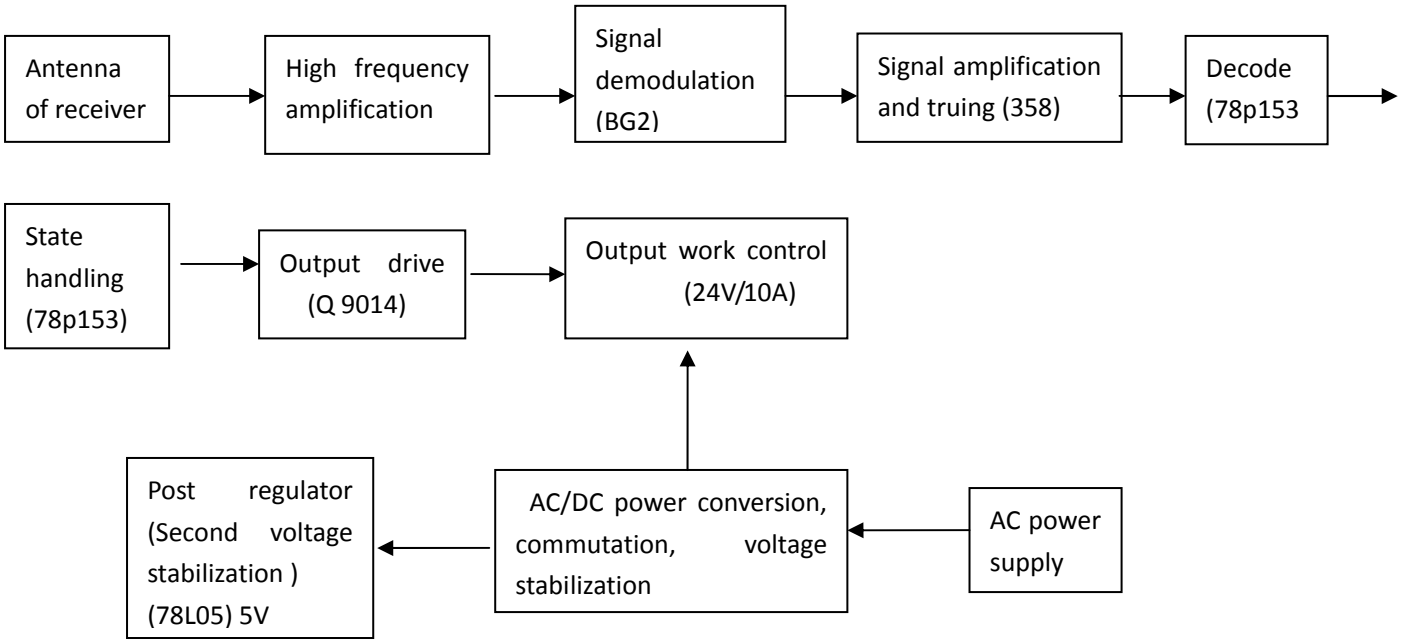Receiver working principle block diagram