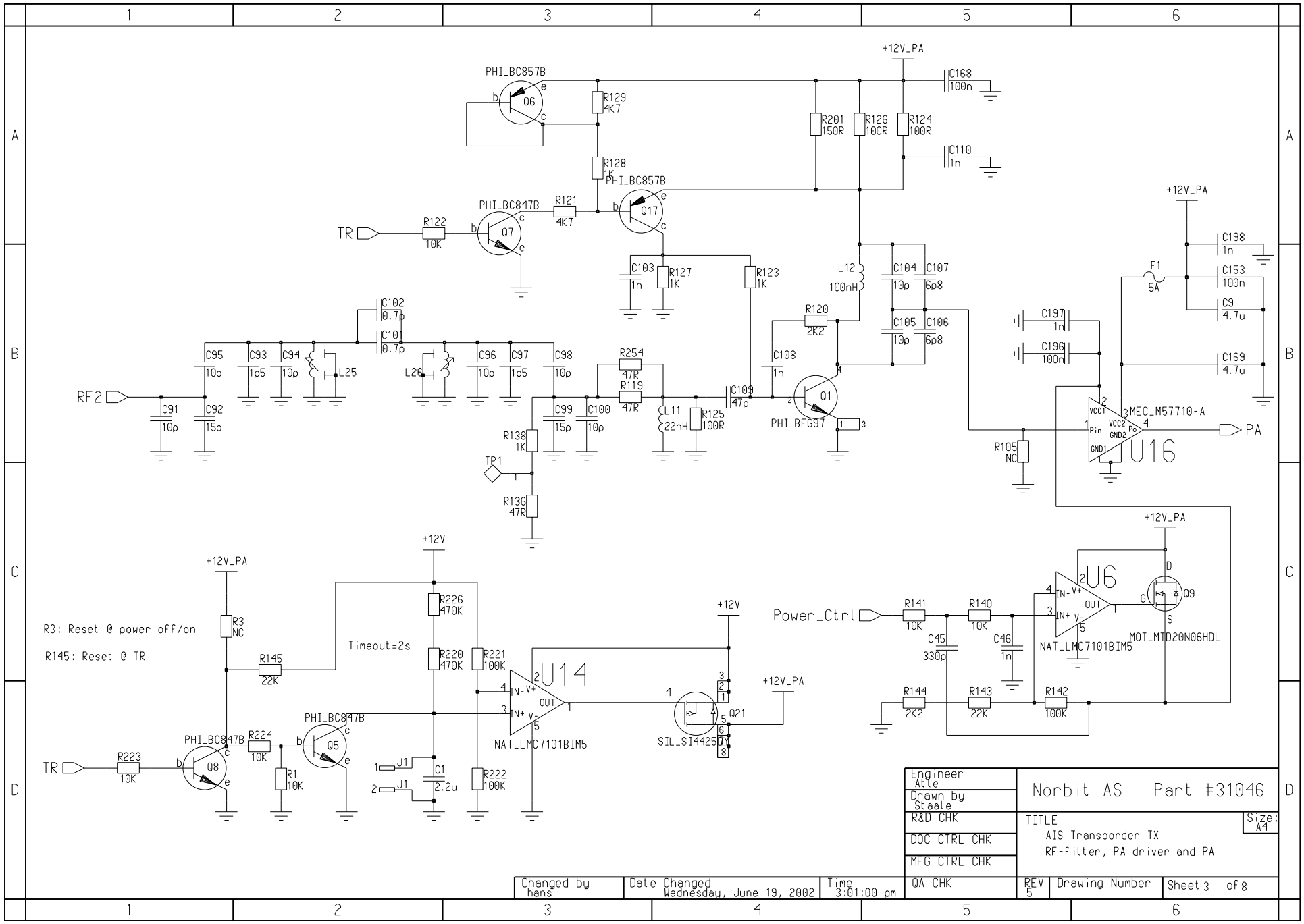

Engineer Atle	Norbit AS Part #31046		
Drawn by Staale			
R&D CHK	TITLE AIS Transponder TX RF-filter, PA driver and PA		Size: A4
DOC CTRL CHK			
MFG CTRL CHK			
QA CHK	REV 5	Drawing Number	Sheet 3 of 8

Changed by hans | Date Changed Wednesday, June 19, 2002 | Time 3:01:00 pm