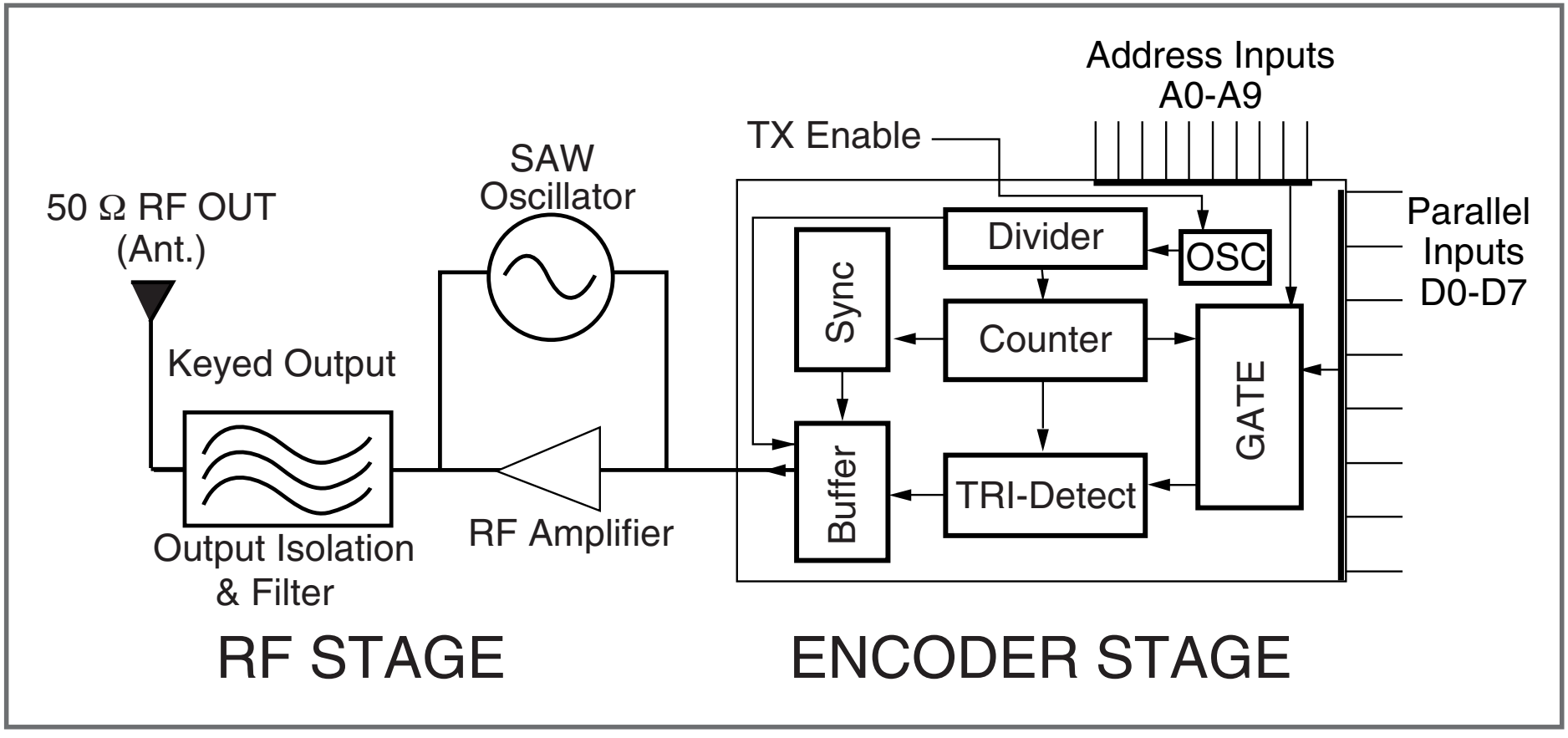

figure 12: KH Series Transmitter Block Diagram