W800A 原理图

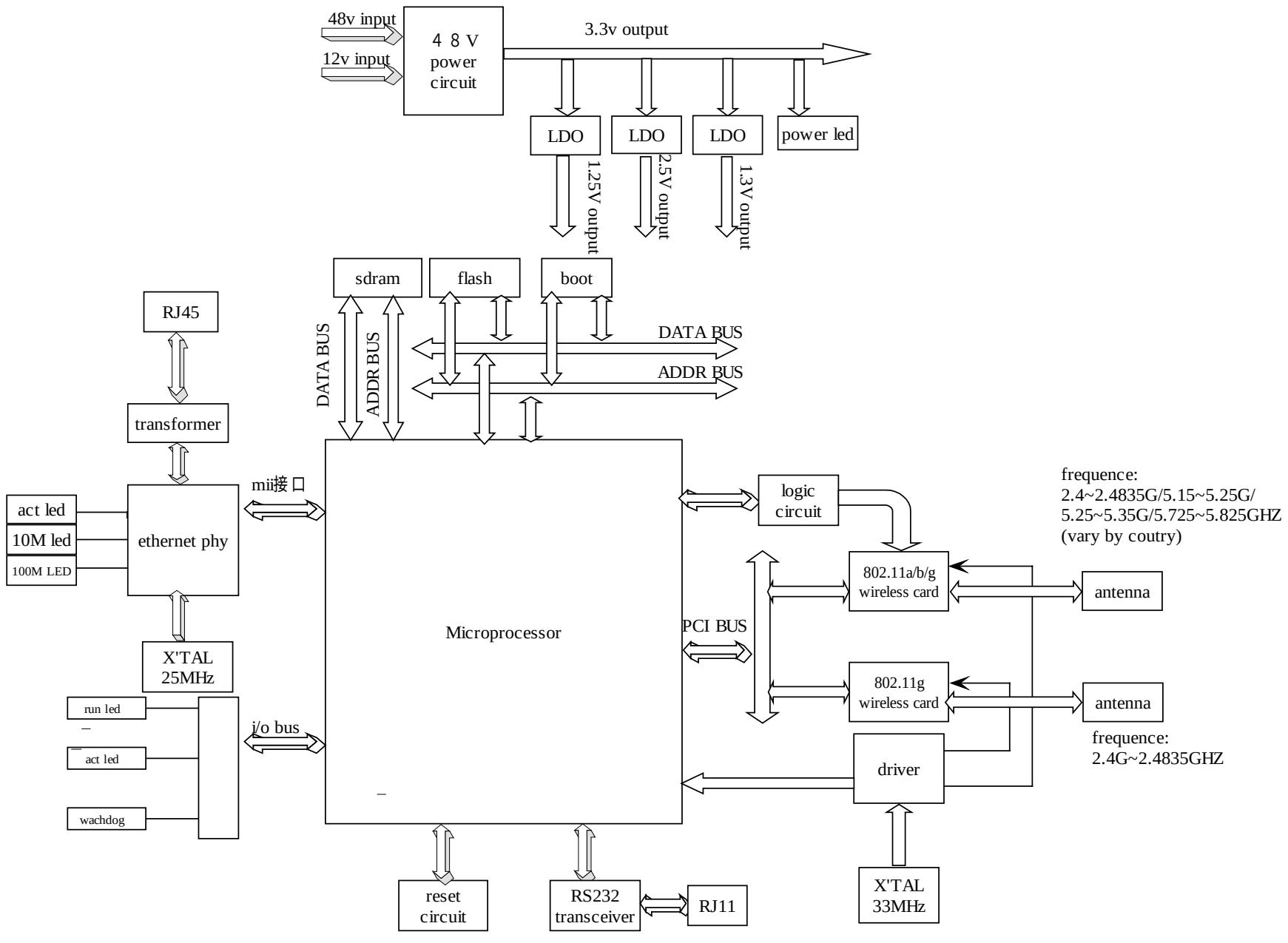
48v input
12v input
4 8 V power circuit
3.3v output
LDO
LDO
LDO
power led
1.25V output
2.5V output
1.3V output
sdram
flash
boot
RJ45
DATA BUS
ADDR BUS
DATA BUS
ADDR BUS
transformer
mii接口
act led
10M led
100M LED
ethernet phy
X'TAL 25MHz
run led
act led
wachdog
i/o bus
Microprocessor
logic circuit
PCI BUS
802.11a/b/g wireless card
antenna
frequence: 2.4~2.4835G/5.15~5.25G/ 5.25~5.35G/5.725~5.825GHZ (vary by coutry)
802.11g wireless card
antenna
frequence: 2.4G~2.4835GHZ
driver
reset circuit
RS232 transceiver
RJ11
X'TAL 33MHz