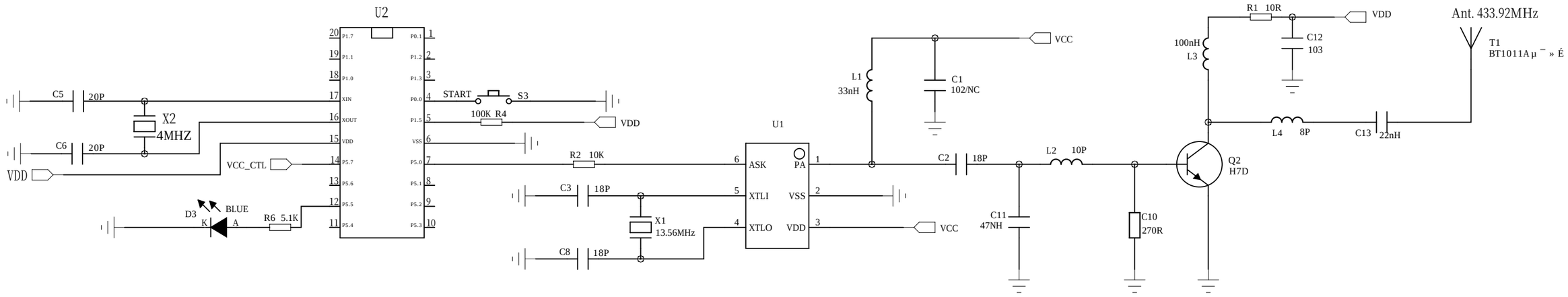

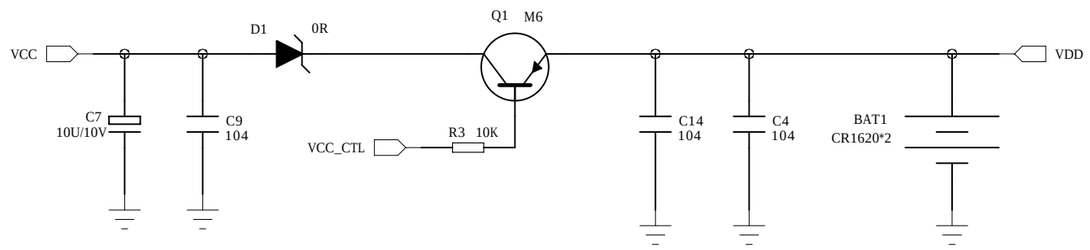

Steel mate			TITLE:		
			NO:		
DATE		REV		PAG	
DRAWN		CHK		APP	