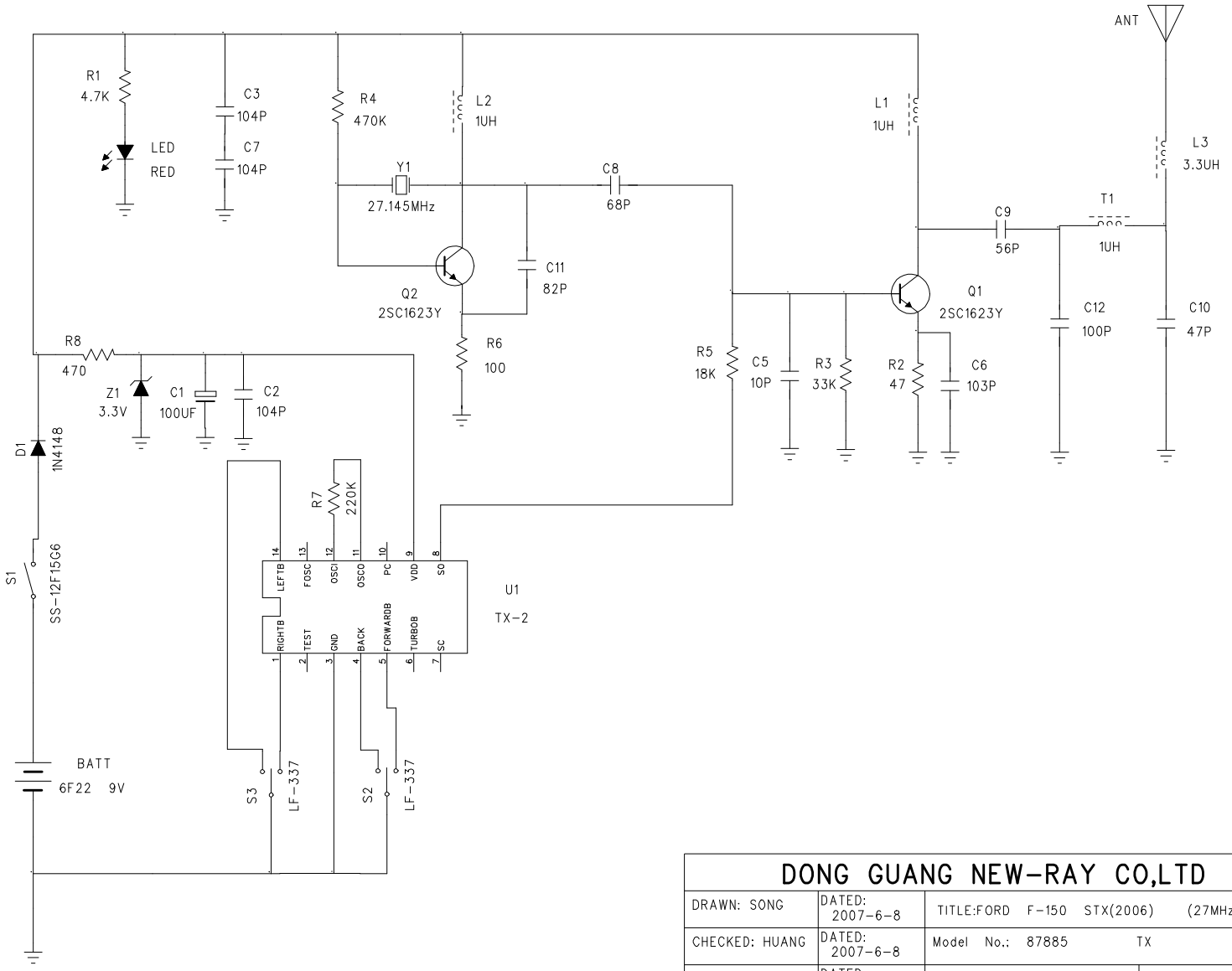

DONG GUANG NEW-RAY CO,LTD				
DRAWN: SONG	DATED: 2007-6-8	TITLE:FORD F-150 STX(2006) (27MHz)		
CHECKED: HUANG	DATED: 2007-6-8	Model No.: 87885 TX		1 of 1
APP	DATED:	DRAWING NO:	REV: 1.0	SIZE: A4