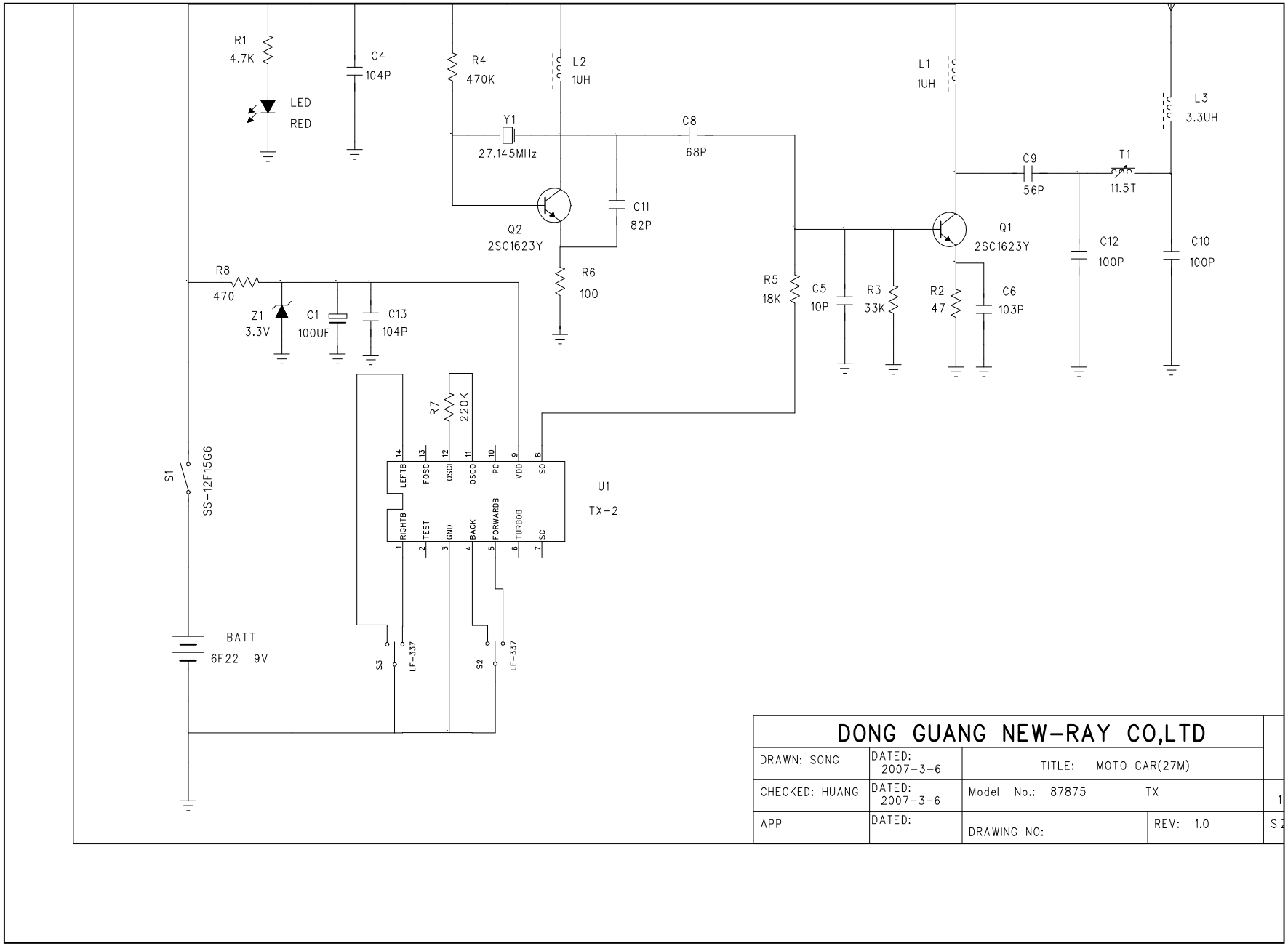
R1
4.7K
LED
RED
C4
104P
R4
470K
L2
1UH
Y1
27.145MHz
C8
68P
C11
82P
Q2
2SC1623Y
R6
100
L1
1UH
C9
56P
T1
11.5T
L3
3.3UH
Q1
2SC1623Y
C12
100P
C10
100P
R5
18K
C5
10P
R3
33K
R2
47
C6
103P
R8
470
Z1
3.3V
C1
100UF
C13
104P
R7
220K
S1
SS-12F15G6
U1
TX-2
LEFTB
FOSC
OSCI
OSCO
PC
VDD
SO
RIGHTB
TEST
GND
BACK
FORWARDB
TURBOB
SC
BATT
6F22 9V
S3
LF-337
S2
LF-337
DONG GUANG NEW-RAY CO,LTD
DRAWN: SONG
DATED: 2007-3-6
TITLE: MOTO CAR(27M)
CHECKED: HUANG
DATED: 2007-3-6
Model No.: 87875 TX
APP
DATED:
DRAWING NO:
REV: 1.0