ECR/ECN	Initials	Issue	Date
F1YR05	MTJH	03	30/08/02
F1YR06	MTJH	01	16/09/02

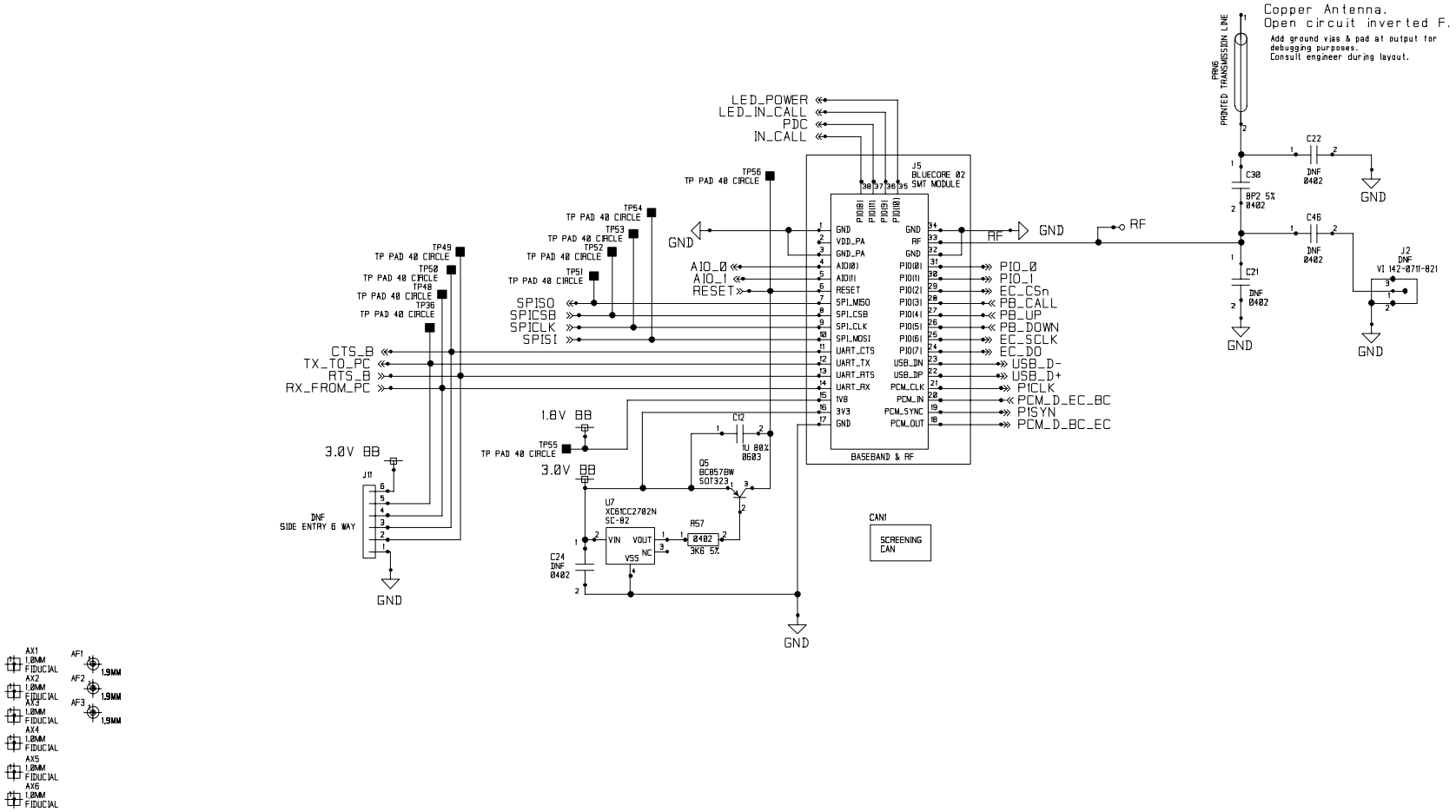

Plextek Limited owns the copyright of this drawing which is not to be copied, reproduced or disclosed, in part or whole without prior written permission.

Notes

Plextek Limited Communications Technology Consultants
London Road, Great Chesterford, Essex CB10 1NY
Tel: (01799) 533200 Fax: (01799) 533201

Drawn by	MTJH
Checked	
D.O. Approved	

Project	FIDO
Title	BLUECORE 2 MODULE
Doc. No.	F1P1S04
SCALE	2
SHEET	OF 6