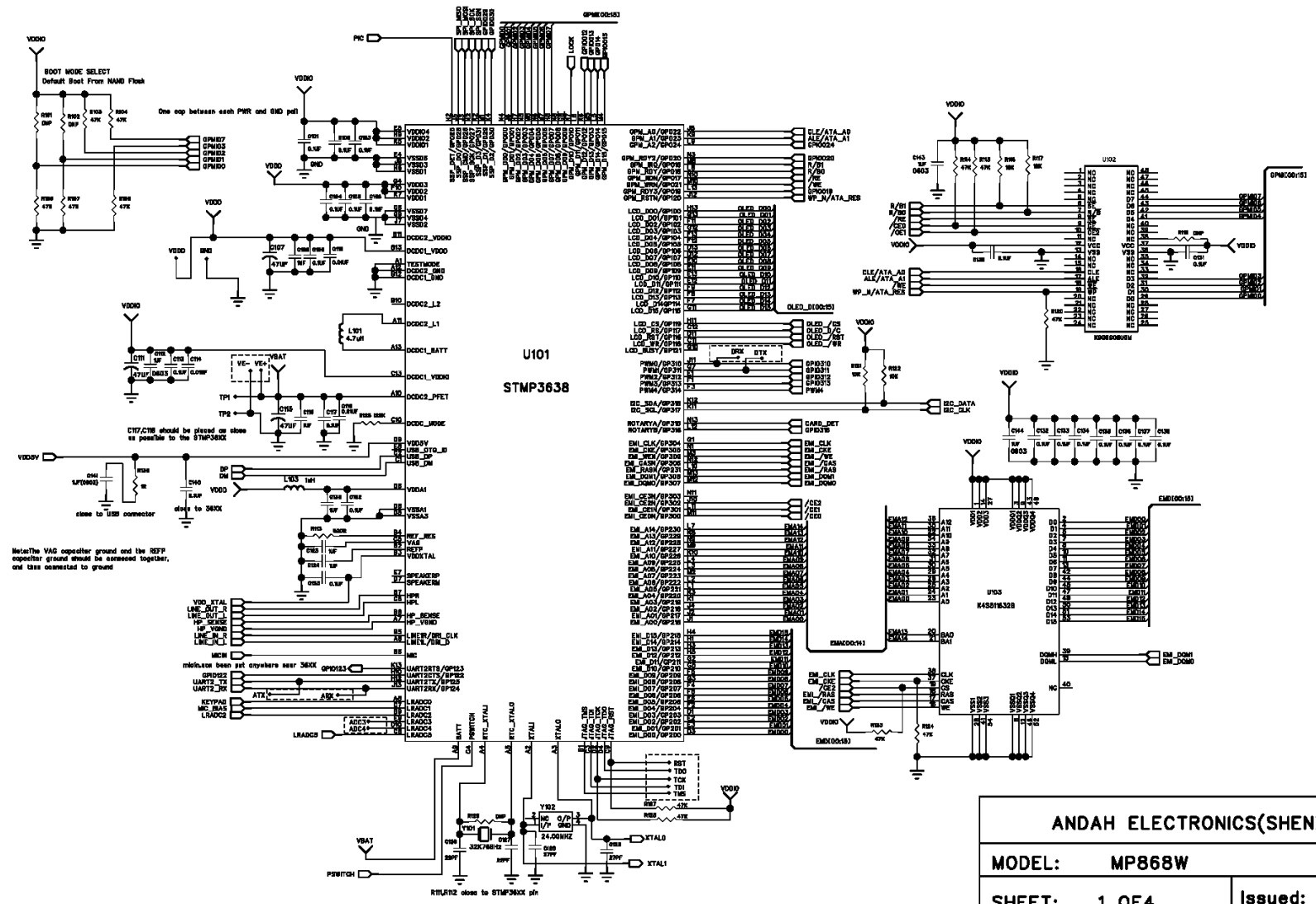

ANDAH ELECTRONICS(SHENZHEN)LTD.	
MODEL: MP868W	
SHEET: 1 OF4	Issued:
REV: A2	APPROVED:
NO: FMP868WCD0196	CHECKED:
DATE: 2007.10.30	DESIGNED:

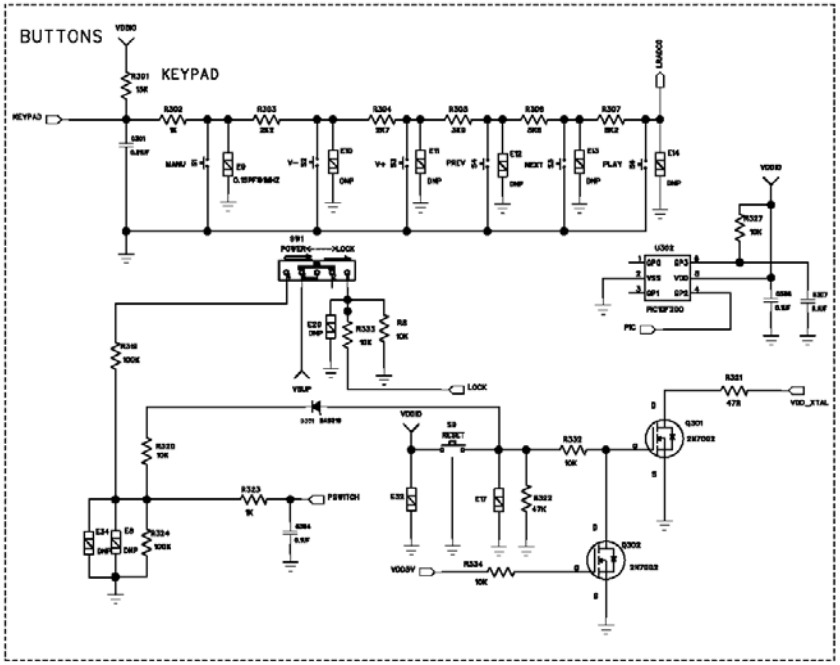

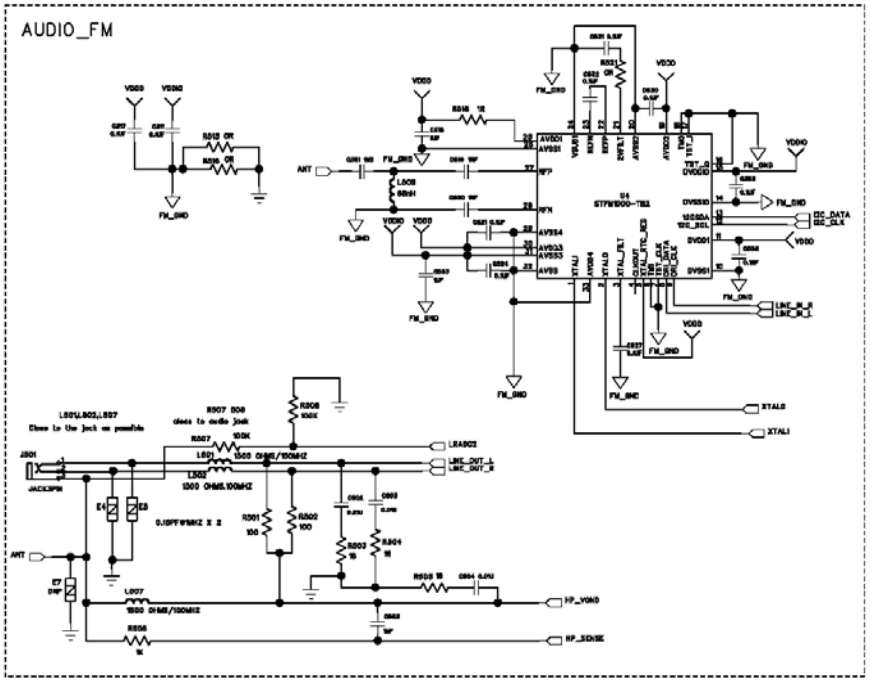

ANDAH ELECTRONICS(SHENZHEN)LTD.	
MODEL: MP868W	
SHEET: 2 OF4	Issued:
REV: A2	APPROVED:
NO: FMP868WCD0196	CHECKED:
DATE: 2007.10.30	DESIGNED:

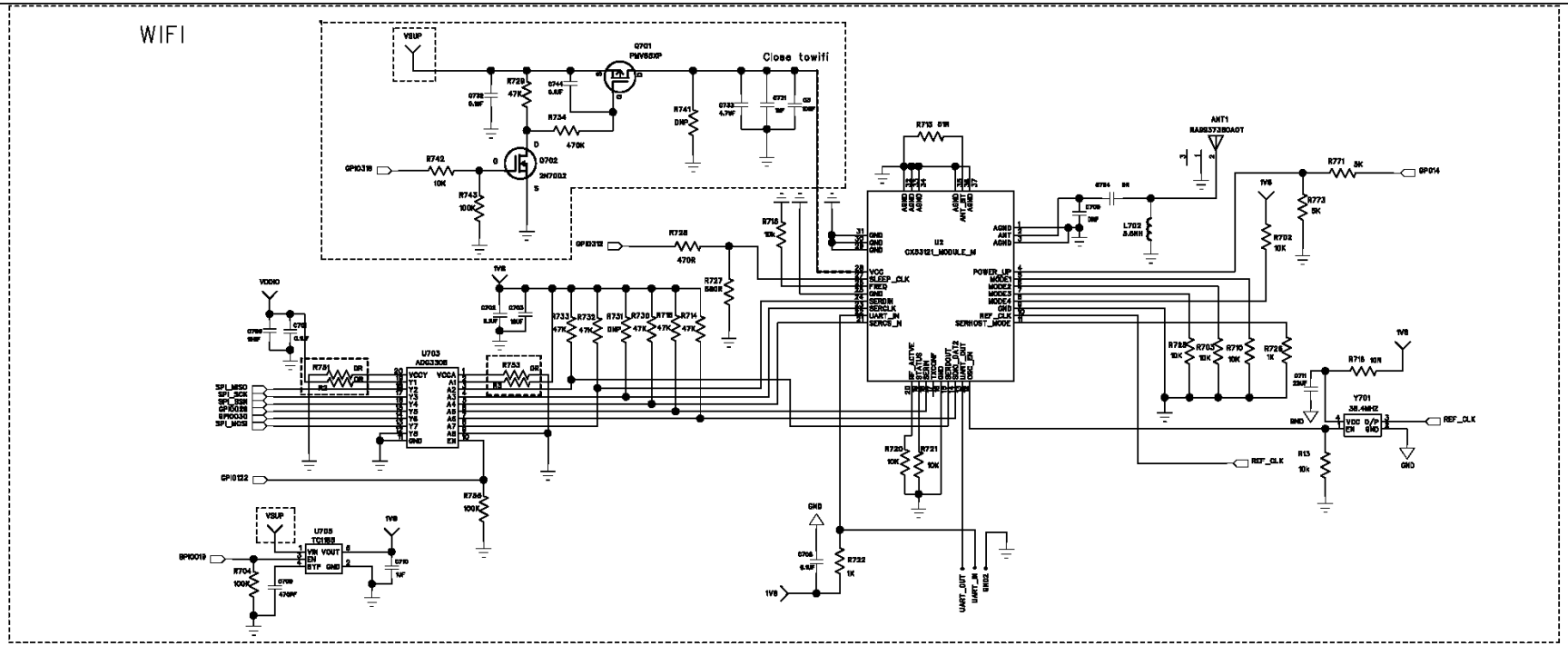

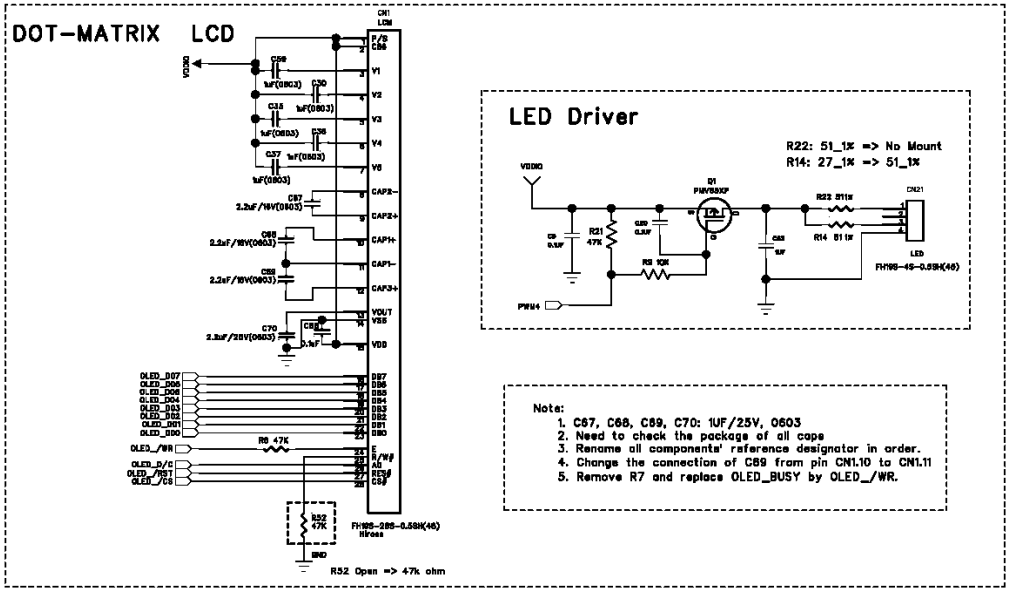

Note:
1. C67, C68, C69, C70: 1UF/25V, 0603
2. Need to check the package of all caps
3. Rename all components' reference designator in order.
4. Change the connection of C69 from pin CN1.10 to CN1.11
5. Remove R7 and replace OLED_BUSY by OLED_/WR.

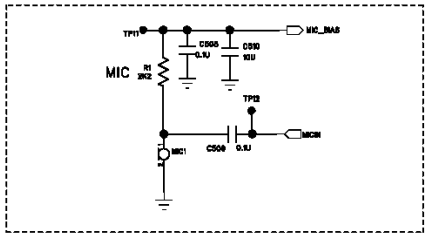

ANDAH ELECTRONICS(SHENZHEN)LTD.		
MODEL:	MP868W	
SHEET:	3 OF4	Issued:
REV:	A2	APPROVED:
NO:	FMP868WCD0196	CHECKED:
DATE:	2007.10.30	DESIGNED:

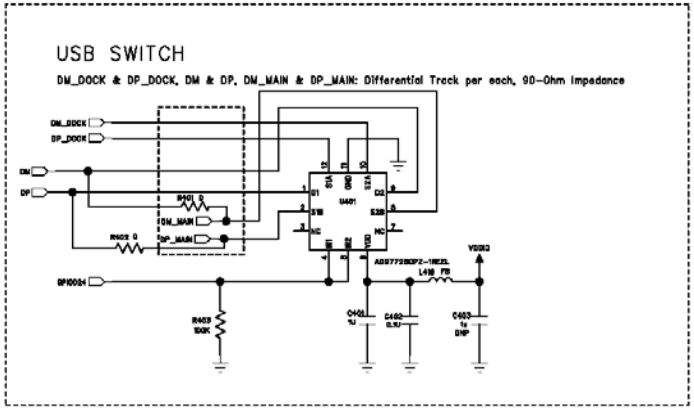

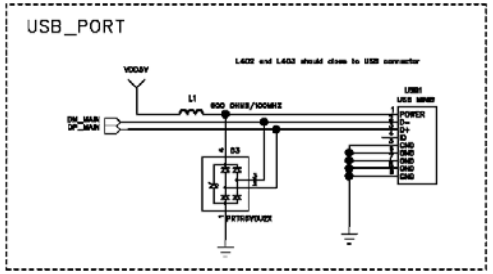

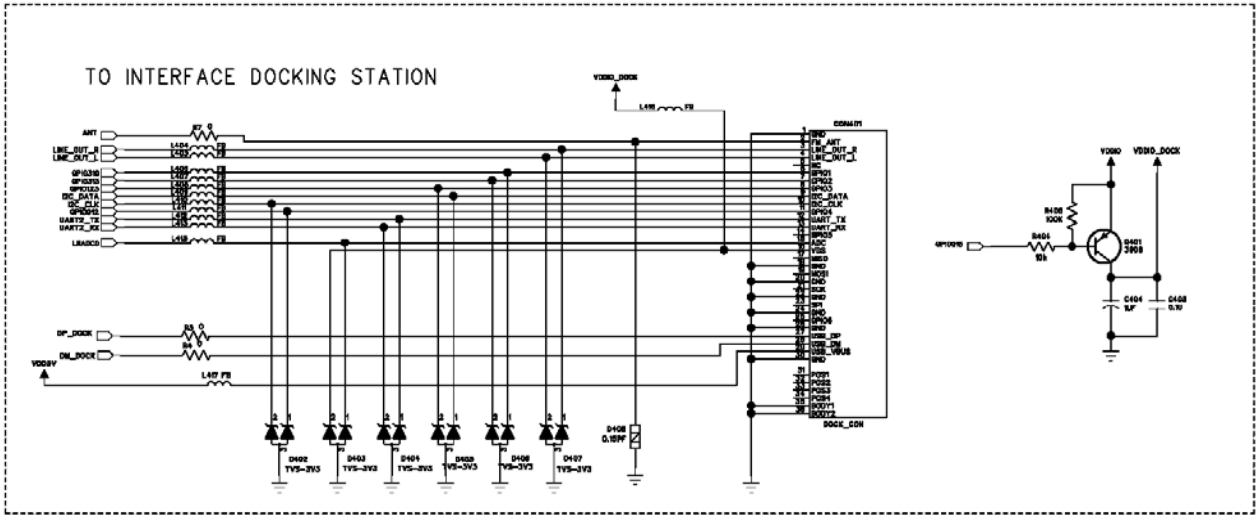

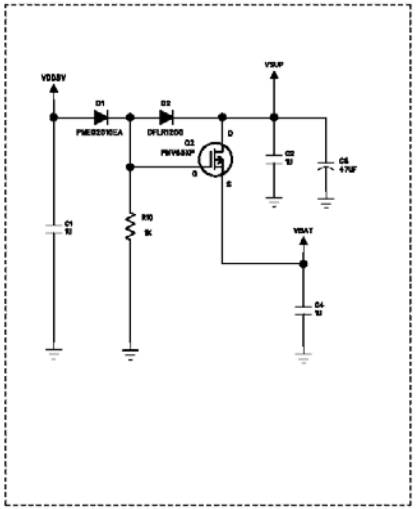

ANDAH ELECTRONICS(SHENZHEN)LTD.	
MODEL: MP868W	
SHEET: 4 OF4	Issued:
REV: A2	APPROVED:
NO: FMP868WCD0196	CHECKED:
DATE: 2007.10.30	DESIGNED: