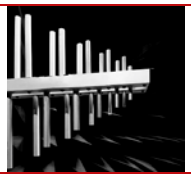
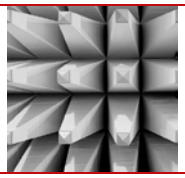

CETECOM™
CETECOM ICT Services
consulting - testing - certification

TEST REPORT

Test Report No.: 1-6965/13-12-02

ilac-MRA DAkkS Deutsche Akkreditierungsstelle D-PL-12076-01-01

Testing Laboratory

CETECOM ICT Services GmbH
Untertürkheimer Straße 6 – 10
66117 Saarbrücken/Germany
Phone: + 49 681 5 98 - 0
Fax: + 49 681 5 98 - 9075
Internet: http://www.cetecom.com
e-mail: ict@cetecom.com

Accredited Test Laboratory:
The testing laboratory (area of testing) is accredited according to DIN EN ISO/IEC 17025 (2005) by the Deutsche Akkreditierungsstelle GmbH (DAkkS)
The accreditation is valid for the scope of testing procedures as stated in the accreditation certificate with the registration number: D-PL-12076-01-01

Applicant

Sony Mobile Communications AB
Nya Vattentornet
22188 Lund/SWEDEN

Phone: +46 46 19 30 00

Contact: Mikael Nilsson
e-mail: Micke.nilsson@sonymobile.com
Phone: +46 7 03 22 75 03
Fax: -/-

Manufacturer

Sony Mobile Communications AB
Nya Vattentornet
22188 Lund/SWEDEN

Test Standard/s

IEEE 1528-2003	Recommended Practice for Determining the Peak Spatial-Average Specific Absorption Rate (SAR)in the Human Head from Wireless Communications Devices: Measurement Techniques
RSS-102 Issue 4	Radio Frequency Exposure Compliance of Radiocommunication Apparatus (All Frequency Bands)

For further applied test standards please refer to section 3 of this test report.

Test Item

Kind of test item:	Tablet PC
Device type:	portable device
S/N serial number:	CB5126DAER / CB5126DAGA / CB5126DAGZ / CB5126DAGK/ CB5126DAFK / CB5126DAGB / CB5126DAHX / CB5126DAHF
FCC-ID:	PY7TM-0044
IC:	---
IMEI-Number:	00440245-216823-4 / 00440245-216852-3 / 00440245-216816-8 / 00440245-216815-0 / 00440245-216824-2 / 00440245-216812-7 / 00440245-216807-7 / 00440245-216809-3
Hardware status:	AP1
Software status:	17.1.A.0.379
Frequency:	see technical details
Antenna:	integrated antenna
Battery option:	Integrated Li-polymer battery 3.7V
Accessories:	Stereo headset model: MH750; type: AG-0501
Test sample status:	identical prototype
Exposure category:	general population / uncontrolled environment

This test report is electronically signed and valid without handwriting signature. For verification of the electronic signatures, the public keys can be requested at the testing laboratory.

Test Report authorised:

Thomas Vogler

DN: cn=Thomas Vogler, o=CETECOM ICT Services GmbH, ou=VOG-100727, email=thomas.vogler@cetecom.com, c=DE
Datum: 2014.03.10 09:33:02 +01'00'

Thomas Vogler
Senior Testing Manager

Test performed:

cn=Oleksandr Hnatovskiy, o=CETECOM ICT, ou=HNA-100728, email=Oleksandr.Hnatovskiy@cetecom.com, c=DE
2014.03.10 09:28:01 +01'00'

Oleksandr Hnatovskiy
Testing Manager

1 Table of contents

1 Table of contents 2

2 General information 4

2.1 Notes and disclaimer 4
2.2 Application details 4
2.3 Statement of compliance 4
2.4 Technical details 5
2.5 Transmitter and Antenna Operating Configurations 6

3 Test standards/ procedures references 7

3.1 RF exposure limits 9

4 Summary of Measurement Results 10

4.1 SAR measurement variability and measurement uncertainty analysis 10

5 Test Environment 10

6 Test Set-up 11

6.1 Measurement system 11
6.1.1 System Description 11
6.1.2 Test environment 12
6.1.3 Probe description 12
6.1.4 Phantom description 13
6.1.5 Device holder description 13
6.1.6 Laptop Extension Kit for Device holder 13
6.1.7 Scanning procedure 14
6.1.8 Spatial Peak SAR Evaluation 15
6.1.9 Data Storage and Evaluation 16
6.1.10 Tissue simulating liquids: dielectric properties 18
6.1.11 Tissue simulating liquids: parameters 19
6.1.12 Measurement uncertainty evaluation for SAR test 20
6.1.13 Measurement uncertainty evaluation for System Check 24
6.1.14 System check 26
6.1.15 System check procedure 27
6.1.16 System validation 28

7 Detailed Test Results 29

7.1.1 Proximity sensor test result overview 29
7.1.2 Power reduction: 29
7.1.3 Resulting test positions for SAR measurements. 30
7.1.4 Safety measures in case of sensor malfunctions 30
7.2 Conducted power measurements 30
7.2.1 Conducted power measurements GSM 850 MHz 31
7.2.2 Conducted power measurements GSM 1900 MHz 32
7.2.3 Justification of SAR measurements in GSM mode 32
7.2.4 Conducted power measurements WCDMA FDD V (850 MHz) 33
7.2.5 Conducted power measurements WCDMA FDD II (1900 MHz) 34
7.2.6 Test-set-up information for WCDMA / HSPDA / HSUPA 35
7.2.7 Conducted power measurements LTE FDD 17 700 MHz 40
7.2.8 Justification of SAR measurements in LTE mode 41
7.2.9 MPR information in LTE mode 41
7.2.1 Conducted power measurements WLAN 2.4 GHz 42
7.2.2 Conducted power measurements WLAN 5 GHz 43
7.2.3 Standalone SAR Test Exclusion 46
7.2.4 SAR measurement positions 47
7.3 SAR test results 48

7.3.1 Results overview 48
7.3.2 General description of test procedures 52
7.3.3 Multiple Transmitter Information 53
7.3.4 SAR peak location separation 55

8 Test equipment and ancillaries used for tests 59

9 Observations 59

Annex A: System performance check 60

Annex B: DASY5 measurement results 68

Annex B.1: GSM 850MHz 68
Annex B.2: GSM 1900MHz 69
Annex B.3: UMTS FDD II 70
Annex B.4: UMTS FDD V 71
Annex B.5: LTE FDD 17 72
Annex B.6: WLAN 2450MHz 73
Annex B.7: WLAN 5GHz 74
Annex B.8: Liquid depth 75

Annex C: Photo documentation 77

Annex D: Calibration parameters 77

Annex E: Document History 78

Annex F: Further Information 78

2 General information

2.1 Notes and disclaimer

The test results of this test report relate exclusively to the test item specified in this test report. CETECOM ICT Services GmbH does not assume responsibility for any conclusions and generalisations drawn from the test results with regard to other specimens or samples of the type of the equipment represented by the test item. The test report may only be reproduced or published in full. Reproduction or publication of extracts from the report requires the prior written approval of CETECOM ICT Services GmbH.
This test report is electronically signed and valid without handwriting signature. For verification of the electronic signatures, the public keys can be requested at the testing laboratory.
The testing service provided by CETECOM ICT Services GmbH has been rendered under the current "General Terms and Conditions for CETECOM ICT Services GmbH".
CETECOM ICT Services GmbH will not be liable for any loss or damage resulting from false, inaccurate, inappropriate or incomplete product information provided by the customer.
Under no circumstances does the CETECOM ICT Services GmbH test report include any endorsement or warranty regarding the functionality, quality or performance of any other product or service provided.
Under no circumstances does the CETECOM ICT Services GmbH test report include or imply any product or service warranties from CETECOM ICT Services GmbH, including, without limitation, any implied warranties of merchantability, fitness for purpose, or non-infringement, all of which are expressly disclaimed by CETECOM ICT Services GmbH.
All rights and remedies regarding vendor's products and services for which CETECOM ICT Services GmbH has prepared this test report shall be provided by the party offering such products or services and not by CETECOM ICT Services GmbH.
In no case this test report can be considered as a Letter of Approval.

2.2 Application details

Date of receipt of order:	2013-12-19
Date of receipt of test item:	2014-02-18
Start of test:	2014-02-19
End of test:	2014-02-28
Person(s) present during the test:	

2.3 Statement of compliance

The SAR values found for the Tablet PC are below the maximum recommended levels of 1.6 W/Kg as averaged over any 1 g tissue according to the FCC rule §2.1093, the ANSI/IEEE C 95.1:1992, the NCRP Report Number 86 for uncontrolled environment, according to the Health Canada's Safety Code 6 and the Industry Canada Radio Standards Specification RSS-102 for General Population/Uncontrolled exposure.

2.4 Technical details

Band tested for this test report	Technology	Lowest transmit frequency/MHz	Highest transmit frequency/MHz	Lowest receive Frequency/MHz	Highest receive Frequency/MHz	Kind of modulation	Power Class	Tested power control level	GPRS/EGPRS mobile station class	GPRS/EGPRS multislot class	(E)GPRS voice mode or DTM	Test channel low	Test channel middle	Test channel high	Maximum output power/dBm)*
☐	GSM	880.2	914.8	925.2	959.8	GMSK 8-PSK	4 E2	5	B	33	no	975	37	124	33.5
☐	GSM DCS	1710.2	1784.8	1805.2	1879.8	GMSK 8-PSK	1 E2	0	B	33	no	512	698	885	30.7
☒	GSM cellular	824.2	848.8	869.2	893.8	GMSK 8-PSK	4 E2	5	B	33	no	128	190	251	33.5
☒	GSM PCS	1850.2	1909.8	1930.2	1989.8	GMSK 8-PSK	1 E2	0	B	33	no	512	661	810	30.7
☐	UMTS FDD I	1922.4	1977.6	2112.4	2167.6	QPSK	3	max	--	--	--	9612	9750	9888	23.8
☒	UMTS FDD II	1852.4	1907.6	1932.4	1987.6	QPSK	3	max	--	--	--	9262	9400	9538	24.0
☒	UMTS FDD V	826.4	846.6	871.4	891.6	QPSK	3	max	--	--	--	4132	4182	4233	24.8
☐	LTE FDD 1	1920	1980	2110	2170	QPSK	3	max	--	--	--	18100	18300	18500	23.5
☐	LTE FDD 3	1710	1785	1805	1880	QPSK	3	max	--	--	--	19300	19575	19850	23.5
☒	LTE FDD 17	704	716	734	746	QPSK	3	max	--	--	--	23780	23790	23800	23.5
☐	LTE FDD 18	815	830	860	875	QPSK	3	max	--	--	--	23900	23925	23950	23.6
☐	WLAN	2412	2472	2412	2472	CCK OFDM	--	max	--	--	--	1	7	13	--
☒	WLAN US	2412	2462	2412	2462	CCK OFDM	--	max	--	--	--	1	6	11	10.6
☒	WLAN	5180	5240	5180	5240	OFDM	--	max	--	--	--	36	--	--	11.0
☒	WLAN	5260	5320	5260	5320	OFDM	--	max	--	--	--	--	--	64	10.8
☒	WLAN	5500	5700	5500	5700	OFDM	--	max	--	--	--	--	--	136	10.8
☒	WLAN	5745	5825	5745	5825	OFDM	--	max	--	--	--	149	--	--	10.7
☐	BT	2402	2480	2402	2480	GFSK	3	max	--	--	--	0	39	78	9.7

)*: measured slotted peak power for GSM, averaged max. RMS power for UMTS, LTE, WLAN and BT.

Features:

GSM bands 2.5	(GPRS, EDGE) class B, Multislot class 33 (max 4 TS uplink, max 5 TS downlink, max. 6 TS active), non DTM
Rel 5 HSDPA UE	cat 10 bands 2, 5 (QPSK, 16QAM, 14 Mbps)
Rel 9 HSPA UE	cat: 6 bands 2, 5 (QPSK, no 16QAM, 5.76 Mbps)
Rel 10 LTE UE	cat: 4 bands 1, 3,17, 18 (QPSK, 16QAM, no MIMO, 50Mbps uplink) Maximum TTI bundling: 4
BT BR / BT LE	
ANT+	
RFID 13.56 MHz	

2.5 Transmitter and Antenna Operating Configurations

Simultaneous transmission conditions		
GSM / GPRS / EDGE	+	BT/BLE[1]
GSM / GPRS / EDGE	+	WLAN 2.4GHz
GSM / GPRS / EDGE	+	WLAN 5GHz
UMTS / HSPA	+	BT/BLE
UMTS / HSPA	+	WLAN 2.4GHz
UMTS / HSPA	+	WLAN 5GHz
LTE	+	BT/BLE
LTE	+	WLAN 2.4GHz
LTE	+	WLAN 5GHz
GSM / GPRS / EDGE	+	BT + WLAN 5GHz
UMTS / HSPA	+	BT + WLAN 5GHz
LTE	+	BT + WLAN 5GHz

Table 1: Simultaneous transmission conditions

Note: BT and WLAN can be active at the same time, but only with interleaving of packages switched on board level. That means that they don't transmit at the same time.

BLE[1] - Bluetooth low energy

3 Test standards/ procedures references

Test Standard	Version	Test Standard Description
IEEE 1528-2003	2003-04	Recommended Practice for Determining the Peak Spatial-Average Specific Absorption Rate (SAR) in the Human Head from Wireless Communications Devices: Measurement Techniques
IEEE 1528-2013	2014-06	Recommended Practice for Determining the Peak Spatial-Average Specific Absorption Rate (SAR) in the Human Head from Wireless Communications Devices: Measurement Techniques
RSS-102 Issue 4	2010-03	Radio Frequency Exposure Compliance of Radiocommunication Apparatus (All Frequency Bands)
Canada's Safety Code No. 6	99-EHD-237	Limits of Human Exposure to Radiofrequency Electromagnetic Fields in the Frequency Range from 3 kHz to 300 GHz
IEEE Std. C95-3	2002	IEEE Recommended Practice for the Measurement of Potentially Hazardous Electromagnetic Fields – RF and Microwave
IEEE Std. C95-1	1992	IEEE Standard for Safety Levels with Respect to Human Exposure to Radio Frequency Electromagnetic Fields, 3 kHz to 300 GHz.
IEC 62209-2	2010	Human exposure to radio frequency fields from hand-held and bodymounted wireless communication devices. Human models, instrumentation, and procedures. Procedure to determine the specific absorption rate (SAR) for wireless communication devices used in close proximity to the human body (frequency range of 30 MHz to 6 GHz)

FCC KDBs:

KDB 865664D01v01	May 28, 2013	FCC OET SAR measurement requirements 100 MHz to 6 GHz
KDB 865664D02v01	May 28, 2013	RF Exposure Compliance Reporting and Documentation Considerations
KDB 447498D01v05	May 28, 2013	Mobile and Portable Devices RF Exposure Procedures and Equipment Authorization Policies
KDB 648474D04v01	May 28, 2013	SAR Evaluation Considerations for Wireless Handsets
KDB 941225D01v02	April 10, 2007	SAR Measurements Procedures for 3G Devices
KDB 941225D02v01	December 14, 2009	3GPP R6 HSPA and R7 HSPA+ SAR Guidance
KDB 941225D02v02	May 28, 2013	SAR Guidance for HSPA, HSPA+, DC-HSDPA and 1x-Advanced
KDB 941225D05v02	May 28, 2013	SAR for LTE Devices
KDB 941225D03v01	December, 2008	SAR Test Reduction Procedure for GSM/GPRS/EDGE
KDB 248227D01v01	May, 2007	SAR Measurement Procedures for 802.11 a/b/g Transmitters
KDB 450824D01v01	January, 2007	SAR Probe Calibration and System Verification considerations for measurements from 150 MHz to 3 GHz
KDB 450824D01v01	March 4, 2012	Dipole Requirements for SAR System Validation and Verification
KDB 616217D03v01	November13, 2009	SAR Evaluation Considerations for Laptop Computers with Antennas Built-in on Display Screens

3.1 RF exposure limits

Human Exposure	Uncontrolled Environment General Population	Controlled Environment Occupational
Spatial Peak SAR* (Brain and Trunk)	**1.60 mW/g**	8.00 mW/g
Spatial Average SAR** (Whole Body)	0.08 mW/g	0.40 mW/g
Spatial Peak SAR*** (Hands/Feet/Ankle/Wrist)	4.00 mW/g	20.00 mW/g

Table 2: RF exposure limits

The limit applied in this test report is shown in bold letters

Notes:

* The Spatial Peak value of the SAR averaged over any 1 gram of tissue (defined as a tissue volume in the shape of a cube) and over the appropriate averaging time

** The Spatial Average value of the SAR averaged over the whole body.

*** The Spatial Peak value of the SAR averaged over any 10 grams of tissue (defined as a tissue volume in the shape of a cube) and over the appropriate averaging time.

Uncontrolled Environments are defined as locations where there is the exposure of individuals who have no knowledge or control of their exposure.

Controlled Environments are defined as locations where there is exposure that may be incurred by persons who are aware of the potential for exposure, (i.e. as a result of employment or occupation).

4 Summary of Measurement Results

☒	**No deviations from the technical specifications ascertained**
☐	Deviations from the technical specifications ascertained

Maximum SAR value reported for 1g (W/kg)				
		PCE	**DTS**	**UNII**
body		**1.034**	**0.670**	**0.714**
collocated situations	**ΣSAR evaluation**	**1.462**		
	$SPLSR_i$ ≤ 0.040	**0.024**		

4.1 SAR measurement variability and measurement uncertainty analysis

This analysis is required for worst case results larger than 0.8 W/kg.

frequency band	highest original measurement result at worst case position (W/kg)	repeated measurement result at worst case position (W/kg)	ratio <1.2
GSM 850	0.929	0.928	1.00
UMTS FDD II	0.891	0.901	1.01

5 Test Environment

Ambient temperature: 20 – 24 °C
Tissue Simulating liquid: 20 – 24 °C

Relative humidity content: 40 – 50 %
Air pressure: not relevant for this kind of testing
Power supply: 230 V / 50 Hz

Exact temperature values for each test are shown in the table(s) under 7.1 and/or on the measurement plots.

6 Test Set-up

6.1 Measurement system

6.1.1 System Description

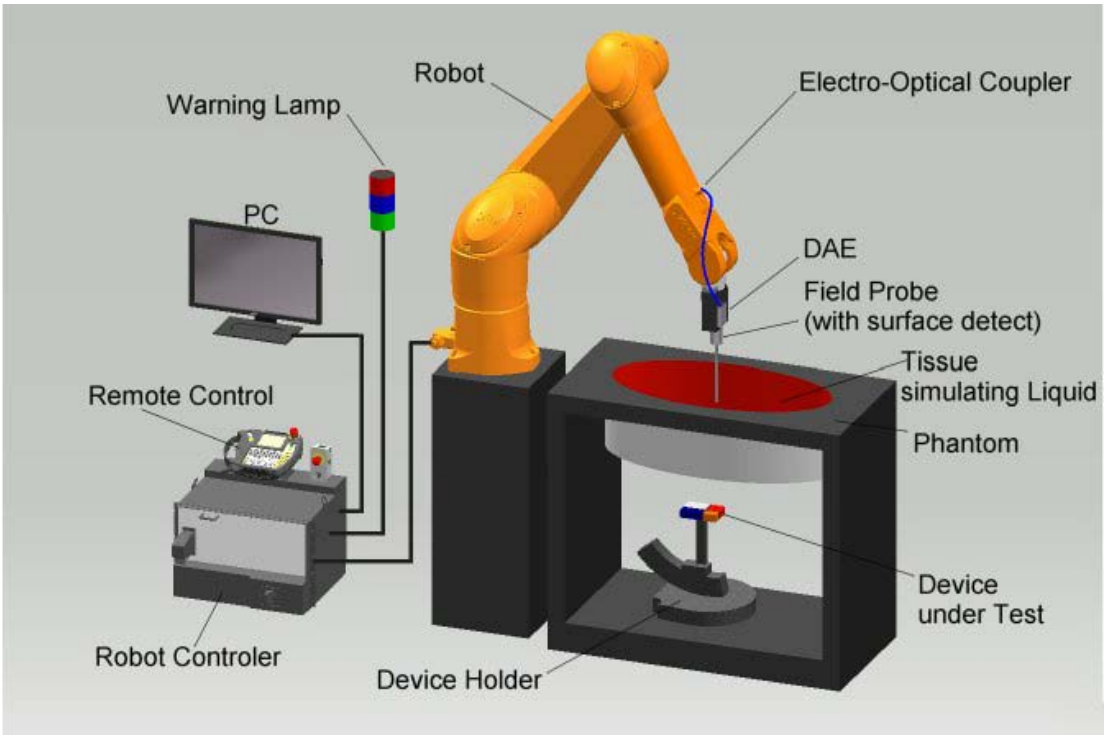

- The DASY system for performing compliance tests consists of the following items:
- A standard high precision 6-axis robot (Stäubli RX family) with controller and software. An arm extension for accommodating the data acquisition electronics (DAE).
- A dosimetric probe, i.e. an isotropic E-field probe optimized and calibrated for usage in tissue simulating liquid. The probe is equipped with an optical surface detector system.
- A data acquisition electronic (DAE) which performs the signal amplification, signal multiplexing, AD-conversion, offset measurements, mechanical surface detection, collision detection, etc. The unit is battery powered with standard or rechargeable batteries. The signal is optically transmitted to the EOC.
- A unit to operate the optical surface detector which is connected to the EOC.
- The Electro-Optical Coupler (EOC) performs the conversion from the optical into a digital electric signal of the DAE. The EOC is connected to the DASY measurement server.
- The DASY measurement server, which performs all real-time data evaluation for field measurements and surface detection, controls robot movements and handles safety operation. A computer operating Windows 7.
- DASY software and SEMCAD data evaluation software.
- Remote control with teach panel and additional circuitry for robot safety such as warning lamps, etc.
- The generic twin phantom enabling the testing of left-hand and right-hand usage.
- The device holder for handheld mobile phones.
- Tissue simulating liquid mixed according to the given recipes.
- System check dipoles allowing to validate the proper functioning of the system.

6.1.2 Test environment

The DASY measurement system is placed at the head end of a room with dimensions:
5 x 2.5 x 3 m³, the SAM phantom is placed in a distance of 75 cm from the side walls and 1.1m from the rear wall. Above the test system a 1.5 x 1.5 m² array of pyramid absorbers is installed to reduce reflections from the ceiling.
Picture 1 of the photo documentation shows a complete view of the test environment.
The system allows the measurement of SAR values larger than 0.005 mW/g.

6.1.3 Probe description

Isotropic E-Field Probe ET3DV6 for Dosimetric Measurements

Technical data according to manufacturer information	
Construction	Symmetrical design with triangular core Built-in optical fiber for surface detection system Built-in shielding against static charges PEEK enclosure material (resistant to organic solvents, e.g., glycolether)
Calibration	In air from 10 MHz to 2.5 GHz In head tissue simulating liquid (HSL) at 900 (800-1000) MHz and 1.8 GHz (1700-1910 MHz) (accuracy ± 9.5%; k=2) Calibration for other liquids and frequencies upon request
Frequency	10 MHz to 3 GHz (dosimetry); Linearity: ± 0.2 dB (30 MHz to 3 GHz)
Directivity	± 0.2 dB in HSL (rotation around probe axis) ± 0.4 dB in HSL (rotation normal to probe axis)
Dynamic range	5 µW/g to > 100 mW/g; Linearity: ± 0.2 dB
Optical Surface Detection	± 0.2 mm repeatability in air and clear liquids over diffuse reflecting surfaces (ET3DV6 only)
Dimensions	Overall length: 330 mm Tip length: 16 mm Body diameter: 12 mm Tip diameter: 6.8 mm Distance from probe tip to dipole centers: 2.7 mm
Application	General dosimetry up to 3 GHz Compliance tests of mobile phones Fast automatic scanning in arbitrary phantoms (ET3DV6)

6.1.4 Phantom description

The used ELI4 Phantom meets the requirements specified in KDB865664 D01 for Specific Absorption Rate (SAR) measurements. The phantom consists of a fibreglass shell integrated in a wooden table.

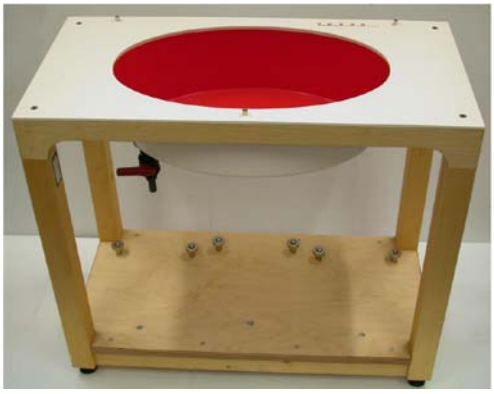

The ELI4 phantom is intended for compliance testing of handheld and body-mounted wireless devices in the frequency range of 30MHz to 6 GHz. ELI4 is fully compatible with the standard IEC 62209-2 and all known tissue simulating liquids.

6.1.5 Device holder description

The DASY device holder has two scales for device rotation (with respect to the body axis) and the device inclination (with respect to the line between the ear openings). The plane between the ear openings and the mouth tip has a rotation angle of 65°. The bottom plate contains three pair of bolts for locking the device holder. The device holder positions are adjusted to the standard measurement positions in the three sections. This device holder is used for standard mobile phones or PDA's only. If necessary an additional support of polystyrene material is used.

Larger DUT's (e.g. notebooks) cannot be tested using the device holder without the extension kit described below.

6.1.6 Laptop Extension Kit for Device holder

SPEAG released a simple but effective extension for their Mounting Device that facilitates the testing of larger devices according to IEC 62209-2 (e.g., laptops, cameras, etc).

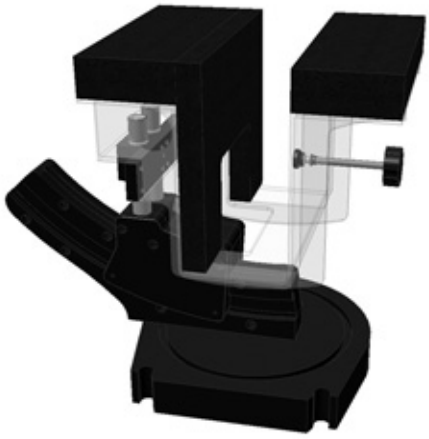

The extension is lightweight and made of POM, PET-G acrylic glass and foam. It fits easily on the upper part of the Mounting Device in place of the phone positioner.

6.1.7 Scanning procedure

- The DASY installation includes predefined files with recommended procedures for measurements and system check. They are read-only document files and destined as fully defined but unmeasured masks. All test positions (head or body-worn) are tested with the same configuration of test steps differing only in the grid definition for the different test positions.

- The „reference“ and „drift“ measurements are located at the beginning and end of the batch process. They measure the field drift at one single point in the liquid over the complete procedure. The indicated drift is mainly the variation of the DUT’s output power and should vary max. +/- 5 %.

- The „surface check“ measurement tests the optical surface detection system of the DASY system by repeatedly detecting the surface with the optical and mechanical surface detector and comparing the results. The output gives the detecting heights of both systems, the difference between the two systems and the standard deviation of the detection repeatability. Air bubbles or refraction in the liquid due to separation of the sugar-water mixture gives poor repeatability (above ± 0.1mm). To prevent wrong results tests are only executed when the liquid is free of air bubbles. The difference between the optical surface detection and the actual surface depends on the probe and is specified with each probe. (It does not depend on the surface reflectivity or the probe angle to the surface within ± 30°.)

- The „area scan“ measures the SAR above the DUT or verification dipole on a parallel plane to the surface. It is used to locate the approximate location of the peak SAR with 2D spline interpolation. The robot performs a stepped movement along one grid axis while the local electrical field strenth is measured by the probe. The probe is touching the surface of the SAM during acquisition of measurement values. The standard scan uses large grid spacing for faster measurement. Standard grid spacing for head measurements is 15 mm in x- and y- dimension. If a finer resolution is needed, the grid spacing can be reduced. Grid spacing and orientation have no influence on the SAR result. For special applications where the standard scan method does not find the peak SAR within the grid, e.g. mobile phones with flip cover, the grid can be adapted in orientation. Results of this coarse scan are shown in annex 2.

- A „7x7x7 zoom scan” measures the field in a volume around the 2D peak SAR value acquired in the previous „coarse“ scan. This is a fine 7x7 grid where the robot additionally moves the probe in 7 steps along the z-axis away from the bottom of the Phantom. Grid spacing for the cube measurement is 5 mm / 4 mm in x and y-direction and 5 mm / 2 mm in z-direction. DASY is also able to perform repeated zoom scans if more than 1 peak is found during area scan. In this document, the evaluated peak 1g and 10g averaged SAR values are shown in the 2D-graphics in annex 2. Test results relevant for the specified standard (see section 3) are shown in table form in section 7.

- A Z-axis scan measures the total SAR value at the x-and y-position of the maximum SAR value found during the cube 7x7x7 scan. The probe is moved away in z-direction from the bottom of the SAM phantom in 2mm steps. This measurement shows the continuity of the liquid and can - depending in the field strength – also show the liquid depth. A z-axis scan of the measurement with maximum SAR value is shown in annex 2.

6.1.8 Spatial Peak SAR Evaluation

The spatial peak SAR - value for 1 and 10 g is evaluated after the Cube measurements have been done. The basis of the evaluation are the SAR values measured at the points of the fine cube grid consisting of 7 x 7 x 7 points. The algorithm that finds the maximal averaged volume is separated into three different stages.

- The data between the dipole center of the probe and the surface of the phantom are extrapolated. This data cannot be measured since the center of the dipole is 2.7 mm away from the tip of the probe and the distance between the surface and the lowest measuring point is about 1 mm (see probe calibration sheet). The extrapolated data from a cube measurement can be visualized by selecting 'Graph Evaluated'.

- The maximum interpolated value is searched with a straight-forward algorithm. Around this maximum the SAR - values averaged over the spatial volumes (1g or 10 g) are computed using the 3d-spline interpolation algorithm. If the volume cannot be evaluated (i.e., if a part of the grid was cut off by the boundary of the measurement area) the evaluation will be started on the corners of the bottom plane of the cube.

- All neighbouring volumes are evaluated until no neighbouring volume with a higher average value is found.

Extrapolation

The extrapolation is based on a least square algorithm [W. Gander, Computermathematik, p.168-180]. Through the points in the first 3 cm along the z-axis, polynomials of order four are calculated. These polynomials are then used to evaluate the points between the surface and the probe tip. The points, calculated from the surface, have a distance of 1 mm from each other.

Interpolation

The interpolation of the points is done with a 3d-Spline. The 3d-Spline is composed of three one-dimensional splines with the "Not a knot"-condition [W. Gander, Computermathematik, p.141-150] (x, y and z -direction) [Numerical Recipes in C, Second Edition, p.123ff].

Volume Averaging

At First the size of the cube is calculated. Then the volume is integrated with the trapezoidal algorithm. 8000 points (20x20x20) are interpolated to calculate the average.

Advanced Extrapolation

DASY uses the advanced extrapolation option which is able to compensate boundary effects on E-field probes.

6.1.9 Data Storage and Evaluation

Data Storage

The DASY software stores the acquired data from the data acquisition electronics as raw data (in microvolt readings from the probe sensors), together with all necessary software parameters for the data evaluation (probe calibration data, liquid parameters and device frequency and modulation data) in measurement files with the extension ".DA4", ".DA5x". The software evaluates the desired unit and format for output each time the data is visualized or exported. This allows verification of the complete software setup even after the measurement and allows correction of incorrect parameter settings. For example, if a measurement has been performed with a wrong crest factor parameter in the device setup, the parameter can be corrected afterwards and the data can be re-evaluated.

The measured data can be visualized or exported in different units or formats, depending on the selected probe type ([V/m], [A/m], [°C], [mW/g], [mW/cm²], [dBrel], etc.). Some of these units are not available in certain situations or show meaningless results, e.g., a SAR output in a lossless media will always be zero. Raw data can also be exported to perform the evaluation with other software packages.

Data Evaluation by SEMCAD

The SEMCAD software automatically executes the following procedures to calculate the field units from the microvolt readings at the probe connector. The parameters used in the evaluation are stored in the configuration modules of the software:

Probe parameters:	- Sensitivity	$Norm_i$, a_{i0}, a_{i1}, a_{i2}
	- Conversion factor	$ConvF_i$
	- Diode compression point	Dcpi
Device parameters:	- Frequency	f
	- Crest factor	cf
Media parameters:	- Conductivity	σ
	- Density	ρ

These parameters must be set correctly in the software. They can be found in the component documents or they can be imported into the software from the configuration files issued for the DASY components. In the direct measuring mode of the multimeter option, the parameters of the actual system setup are used. In the scan visualization and export modes, the parameters stored in the corresponding document files are used.

The first step of the evaluation is a linearization of the filtered input signal to account for the compression characteristics of the detector diode. The compensation depends on the input signal, the diode type and the DC-transmission factor from the diode to the evaluation electronics.

If the exciting field is pulsed, the crest factor of the signal must be known to correctly compensate for peak power. The formula for each channel can be given as:

$$V_i = U_i + U_i^2 \cdot cf/dcp_i$$

with	V_i	= compensated signal of channel i	(i = x, y, z)
	U_i	= input signal of channel i	(i = x, y, z)
	cf	= crest factor of exciting field	(DASY parameter)
	dcp_i	= diode compression point	(DASY parameter)

From the compensated input signals the primary field data for each channel can be evaluated:

E-field probes: $$E_i = (V_i / Norm_i \cdot ConvF)^{1/2}$$

H-field probes: $$H_i = (V_i)^{1/2} \cdot (a_{i0} + a_{i1}f + a_{i2}f^2)/f$$

with	V_i	= compensated signal of channel i	(i = x, y, z)
	$Norm_i$	= sensor sensitivity of channel i [mV/(V/m)^2] for E-field Probes	(i = x, y, z)
	ConvF	= sensitivity enhancement in solution	
	a_{ij}	= sensor sensitivity factors for H-field probes	
	f	= carrier frequency [GHz]	
	E_i	= electric field strength of channel i in V/m	
	H_i	= magnetic field strength of channel i in A/m	

The RSS value of the field components gives the total field strength (Hermitian magnitude):

$$E_{tot} = (E_x^2 + E_Y^2 + E_z^2)^{1/2}$$

The primary field data are used to calculate the derived field units.

$$SAR = (E_{tot}^2 \cdot \sigma) / (\rho \cdot 1000)$$

with	SAR	= local specific absorption rate in mW/g
	E_{tot}	= total field strength in V/m
	σ	= conductivity in [mho/m] or [Siemens/m]
	ρ	= equivalent tissue density in g/cm^3

Note that the density is normally set to 1 (or 1.06), to account for actual brain density rather than the density of the simulation liquid.The power flow density is calculated assuming the excitation field to be a free space field.

$$P_{pwe} = E_{tot}^2 / 3770 \qquad \text{or} \qquad P_{pwe} = H_{tot}^2 \cdot 37.7$$

with	P_{pwe}	= equivalent power density of a plane wave in mW/cm^2
	E_{tot}	= total electric field strength in V/m
	H_{tot}	= total magnetic field strength in A/m

6.1.10 Tissue simulating liquids: dielectric properties

The following materials are used for producing the tissue-equivalent materials.

(Liquids used for tests described in section 7. are marked with ☒) :

Ingredients (% of weight)	**Frequency (MHz)**								
frequency band	☐ 450	☒ 750	☒ 835	☐ 900	☐ 1450	☒ 1750	☒ 1900	☒ 2450	☒ 5000
Tissue Type	Body	Body	Body	Body	Body	Body	Body	Body	Body
Water	51.16	51.7	52.4	56.0	70.97	69.91	69.91	73.2	64 - 78
Salt (NaCl)	1.49	0.9	1.40	0.76	0.43	0.13	0.13	0.04	2 - 3
Sugar	46.78	47.2	45.0	41.76	0.0	0.0	0.0	0.0	0.0
HEC	0.52	0.0	1.0	1.21	0.0	0.0	0.0	0.0	0.0
Bactericide	0.05	0.1	0.1	0.27	0.0	0.0	0.0	0.0	0.0
Triton X-100	0.0	0.0	0.0	0.0	0.0	0.0	0.0	0.0	0.0
DGBE	0.0	0.0	0.0	0.0	28.60	29.96	29.96	26.7	0.0
Emulsifiers	0.0	0.0	0.0	0.0	0.0	0.0	0.0	0.0	9 - 15
Mineral Oil	0.0	0.0	0.0	0.0	0.0	0.0	0.0	0.0	11 - 18

Table 3: Body tissue dielectric properties

Salt: 99+% Pure Sodium Chloride
Water: De-ionized, 16MΩ+ resistivity
Sugar: 98+% Pure Sucrose
HEC: Hydroxyethyl Cellulose
DGBE: 99+% Di(ethylene glycol) butyl ether, [2-(2-butoxyethoxy)ethanol]
Triton X-100(ultra pure): Polyethylene glycol mono [4-(1,1,3,3-tetramethylbutyl)phenyl]ether

6.1.11 Tissue simulating liquids: parameters

Liquid **MSL**	Freq. (MHz)	Target **body** tissue		Measurement **body** tissue					Measurement date
		Permittivity	Conductivity [S/m]	Permittivity	Dev. %	Conductivity ε"	Conductivity [S/m]	Dev. %	
750	709	55.69	0.96	55.1	-1.1%	23.54	0.93	-3.3%	2014-02-21
	710	55.69	0.96	55.1	-1.1%	23.54	0.93	-3.2%	
	711	55.68	0.96	55.0	-1.2%	23.54	0.93	-3.0%	
	750	55.53	0.96	54.5	-1.8%	23.35	0.97	1.1%	
850	824	55.24	0.97	55.7	0.9%	21.65	0.99	2.4%	2014-02-19
	825	55.24	0.97	55.7	0.9%	21.65	0.99	2.5%	
	835	55.20	0.97	55.6	0.7%	21.66	1.01	3.7%	
	837	55.19	0.97	55.6	0.7%	21.64	1.01	3.6%	
	847	55.16	0.98	55.5	0.6%	21.53	1.01	3.0%	
	849	55.16	0.99	55.5	0.6%	21.52	1.02	2.9%	
1900	1850	53.30	1.52	53.0	-0.5%	14.24	1.46	-3.6%	2014-02-20
	1852	53.30	1.52	53.0	-0.5%	14.24	1.47	-3.5%	
	1880	53.30	1.52	52.8	-0.9%	14.45	1.51	-0.6%	
	1900	53.30	1.52	52.8	-0.9%	14.52	1.53	1.0%	
	1908	53.30	1.52	52.8	-1.0%	14.52	1.54	1.4%	
	1910	53.30	1.52	52.8	-0.9%	14.53	1.54	1.6%	
2450	2412	52.75	1.91	51.6	-2.3%	14.21	1.91	-0.4%	2014-02-24
	2437	52.72	1.94	51.5	-2.3%	14.31	1.94	0.1%	
	2450	52.70	1.95	51.5	-2.2%	14.40	1.96	0.6%	
	2462	52.68	1.97	51.6	-2.1%	14.47	1.98	0.7%	
5GHz	5200	49.01	5.30	48.4	-1.3%	18.04	5.22	-1.6%	2014-02-26
	5220	48.99	5.32	48.3	-1.4%	18.01	5.23	-1.8%	
	5260	48.93	5.37	48.0	-2.0%	18.06	5.28	-1.6%	
	5500	48.61	5.65	47.6	-2.0%	18.32	5.61	-0.8%	
	5520	48.58	5.67	47.6	-2.0%	18.37	5.64	-0.6%	
	5580	48.50	5.74	47.7	-1.7%	18.37	5.70	-0.7%	
	5620	48.44	5.79	47.6	-1.8%	18.39	5.75	-0.7%	
	5680	48.36	5.86	47.3	-2.3%	18.44	5.83	-0.6%	
	5745	48.27	5.94	47.3	-2.1%	18.53	5.92	-0.3%	
	5800	48.20	6.00	47.1	-2.4%	18.48	5.96	-0.6%	

Table 4: Parameter of the body tissue simulating liquid
Note: The dielectric properties have been measured using the contact probe method at 22°C.

6.1.12 Measurement uncertainty evaluation for SAR test

Relative DASY5 Uncertainty Budget for SAR Tests								
According to IEEE 1528/2011 and IEC62209-1/2011 (0.3-3GHz range)								
Error Description	Uncertainty Value	Probability Distribution	Divisor	c_i (1g)	c_i (10g)	Standard Uncertainty ± %, (1g)	Standard Uncertainty ± %, (10g)	v_i^2 or v_{eff}
Measurement System								
Probe calibration	± 6.0 %	Normal	1	1	1	± 6.0 %	± 6.0 %	∞
Axial isotropy	± 4.7 %	Rectangular	√ 3	0.7	0.7	± 1.9 %	± 1.9 %	∞
Hemispherical isotropy	± 9.6 %	Rectangular	√ 3	0.7	0.7	± 3.9 %	± 3.9 %	∞
Boundary effects	± 1.0 %	Rectangular	√ 3	1	1	± 0.6 %	± 0.6 %	∞
Probe linearity	± 4.7 %	Rectangular	√ 3	1	1	± 2.7 %	± 2.7 %	∞
System detection limits	± 1.0 %	Rectangular	√ 3	1	1	± 0.6 %	± 0.6 %	∞
Modulation Response	± 2.4 %	Rectangular	√ 3	1	1	± 1.4 %	± 1.4 %	∞
Readout electronics	± 0.3 %	Normal	1	1	1	± 0.3 %	± 0.3 %	∞
Response time	± 0.8 %	Rectangular	√ 3	1	1	± 0.5 %	± 0.5 %	∞
Integration time	± 2.6 %	Rectangular	√ 3	1	1	± 1.5 %	± 1.5 %	∞
RF ambient noise	± 3.0 %	Rectangular	√ 3	1	1	± 1.7 %	± 1.7 %	∞
RF ambient reflections	± 3.0 %	Rectangular	√ 3	1	1	± 1.7 %	± 1.7 %	∞
Probe positioner	± 0.4 %	Rectangular	√ 3	1	1	± 0.2 %	± 0.2 %	∞
Probe positioning	± 2.9 %	Rectangular	√ 3	1	1	± 1.7 %	± 1.7 %	∞
Max. SAR evaluation	± 2.0 %	Rectangular	√ 3	1	1	± 1.2 %	± 1.2 %	∞
Test Sample Related								
Device positioning	± 2.9 %	Normal	1	1	1	± 2.9 %	± 2.9 %	145
Device holder uncertainty	± 3.6 %	Normal	1	1	1	± 3.6 %	± 3.6 %	5
Power drift	± 5.0 %	Rectangular	√ 3	1	1	± 2.9 %	± 2.9 %	∞
Phantom and Set-up								
Phantom uncertainty	± 6.1 %	Rectangular	√ 3	1	1	± 3.5 %	± 3.5 %	∞
SAR correction	± 1.9 %	Rectangular	√ 3	1	0.84	± 1.1 %	± 0.9 %	∞
Liquid conductivity (meas.)	± 5.0 %	Rectangular	√ 3	0.78	0.71	± 2.3 %	± 2.0 %	∞
Liquid permittivity (meas.)	± 5.0 %	Rectangular	√ 3	0.26	0.26	± 0.8 %	± 0.8 %	∞
Temp. Unc. - Conductivity	± 3.4 %	Rectangular	√ 3	0.78	0.71	± 1.5 %	± 1.4 %	∞
Temp. Unc. - Permittivity	± 0.4 %	Rectangular	√ 3	0.23	0.26	± 0.1 %	± 0.1 %	∞
Combined Uncertainty						± 11.3 %	± 11.3 %	330
Expanded Std. Uncertainty						± **22.7** %	± **22.5** %	

Table 5: Measurement uncertainties
Worst-Case uncertainty budget for DASY5 assessed according to IEEE 1528/2011 and IEC 62209-1/2011 draft standards. The budget is valid for the frequency range 300MHz -3 GHz and represents a worst-case analysis. For specific tests and configurations, the uncertainty could be considerable smaller.

Relative DASY5 Uncertainty Budget for SAR Tests								
According to IEC62209-2/2010 (30 MHz - 6 GHz range)								
Error Description	Uncertainty Value	Probability Distribution	Divisor	c_i	c_i	Standard Uncertainty		v_i^2 or v_{eff}
				(1g)	(10g)	± %, (1g)	± %, (10g)	
Measurement System								
Probe calibration	± 6.6 %	Normal	1	1	1	± 6.6 %	± 6.6 %	∞
Axial isotropy	± 4.7 %	Rectangular	√ 3	0.7	0.7	± 1.9 %	± 1.9 %	∞
Hemispherical isotropy	± 9.6 %	Rectangular	√ 3	0.7	0.7	± 3.9 %	± 3.9 %	∞
Boundary effects	± 2.0 %	Rectangular	√ 3	1	1	± 1.2 %	± 1.2 %	∞
Probe linearity	± 4.7 %	Rectangular	√ 3	1	1	± 2.7 %	± 2.7 %	∞
System detection limits	± 1.0 %	Rectangular	√ 3	1	1	± 0.6 %	± 0.6 %	∞
Modulation Response	± 2.4 %	Rectangular	√ 3	1	1	± 1.4 %	± 1.4 %	∞
Readout electronics	± 0.3 %	Normal	1	1	1	± 0.3 %	± 0.3 %	∞
Response time	± 0.8 %	Rectangular	√ 3	1	1	± 0.5 %	± 0.5 %	∞
Integration time	± 2.6 %	Rectangular	√ 3	1	1	± 1.5 %	± 1.5 %	∞
RF ambient noise	± 3.0 %	Rectangular	√ 3	1	1	± 1.7 %	± 1.7 %	∞
RF ambient reflections	± 3.0 %	Rectangular	√ 3	1	1	± 1.7 %	± 1.7 %	∞
Probe positioner	± 0.8 %	Rectangular	√ 3	1	1	± 0.5 %	± 0.5 %	∞
Probe positioning	± 6.7 %	Rectangular	√ 3	1	1	± 3.9 %	± 3.9 %	∞
Post-processing	± 4.0 %	Rectangular	√ 3	1	1	± 2.3 %	± 2.3 %	∞
Test Sample Related								
Device positioning	± 2.9 %	Normal	1	1	1	± 2.9 %	± 2.9 %	145
Device holder uncertainty	± 3.6 %	Normal	1	1	1	± 3.6 %	± 3.6 %	5
Power drift	± 5.0 %	Rectangular	√ 3	1	1	± 2.9 %	± 2.9 %	∞
Phantom and Set-up								
Phantom uncertainty	± 7.9 %	Rectangular	√ 3	1	1	± 4.6 %	± 4.6 %	∞
SAR correction	± 1.9 %	Rectangular	√ 3	1	0.84	± 1.1 %	± 0.9 %	∞
Liquid conductivity (meas.)	± 5.0 %	Rectangular	√ 3	0.78	0.71	± 2.3 %	± 2.0 %	∞
Liquid permittivity (meas.)	± 5.0 %	Rectangular	√ 3	0.26	0.26	± 0.8 %	± 0.8 %	∞
Temp. Unc. - Conductivity	± 3.4 %	Rectangular	√ 3	0.78	0.71	± 1.5 %	± 1.4 %	∞
Temp. Unc. - Permittivity	± 0.4 %	Rectangular	√ 3	0.23	0.26	± 0.1 %	± 0.1 %	∞
Combined Uncertainty						± 12.7 %	± 12.6 %	330
Expanded Std. Uncertainty						± **25.4** %	± **25.3** %	

Table 6: Measurement uncertainties. Worst-Case uncertainty budget for DASY5 assessed according to according to IEC 62209-2/2010 standard. The budget is valid for the frequency range 30MHz - 6 GHz and represents a worst-case analysis. For specific tests and configurations, the uncertainty could be considerable smaller.

Relative DASY5 Uncertainty Budget for SAR Tests								
According to IEEE 1528-2003, IEC 62209-1 for the 3-6 GHz range								
Error Description	Uncertainty Value	Probability Distribution	Divisor	c_i	c_i	Standard Uncertainty		v_i^2 or v_{eff}
				(1g)	(10g)	± %, (1g)	± %, (10g)	
Measurement System								
Probe calibration	± 6.6 %	Normal	1	1	1	± 6.6 %	± 6.6 %	∞
Axial isotropy	± 4.7 %	Rectangular	√ 3	0.7	0.7	± 1.9 %	± 1.9 %	∞
Hemispherical isotropy	± 9.6 %	Rectangular	√ 3	0.7	0.7	± 3.9 %	± 3.9 %	∞
Boundary effects	± 2.0 %	Rectangular	√ 3	1	1	± 1.2 %	± 1.2 %	∞
Probe linearity	± 4.7 %	Rectangular	√ 3	1	1	± 2.7 %	± 2.7 %	∞
System detection limits	± 1.0 %	Rectangular	√ 3	1	1	± 0.6 %	± 0.6 %	∞
Readout electronics	± 0.3 %	Normal	1	1	1	± 0.3 %	± 0.3 %	∞
Response time	± 0.8 %	Rectangular	√ 3	1	1	± 0.5 %	± 0.5 %	∞
Integration time	± 2.6 %	Rectangular	√ 3	1	1	± 1.5 %	± 1.5 %	∞
RF ambient noise	± 3.0 %	Rectangular	√ 3	1	1	± 1.7 %	± 1.7 %	∞
RF ambient reflections	± 3.0 %	Rectangular	√ 3	1	1	± 1.7 %	± 1.7 %	∞
Probe positioner	± 0.8 %	Rectangular	√ 3	1	1	± 0.5 %	± 0.5 %	∞
Probe positioning	± 6.7 %	Rectangular	√ 3	1	1	± 3.9 %	± 3.9 %	∞
Max. SAR evaluation	± 4.0 %	Rectangular	√ 3	1	1	± 2.3 %	± 2.3 %	∞
Test Sample Related								
Device positioning	± 2.9 %	Normal	1	1	1	± 2.9 %	± 2.9 %	145
Device holder uncertainty	± 3.6 %	Normal	1	1	1	± 3.6 %	± 3.6 %	5
Power drift	± 5.0 %	Rectangular	√ 3	1	1	± 2.9 %	± 2.9 %	∞
Phantom and Set-up								
Phantom uncertainty	± 4.0 %	Rectangular	√ 3	1	1	± 2.3 %	± 2.3 %	∞
Liquid conductivity (target)	± 5.0 %	Rectangular	√ 3	0.64	0.43	± 1.8 %	± 1.2 %	∞
Liquid conductivity (meas.)	± 5.0 %	Rectangular	√ 3	0.64	0.43	± 1.8 %	± 1.2 %	∞
Liquid permittivity (target)	± 5.0 %	Rectangular	√ 3	0.6	0.49	± 1.7 %	± 1.4 %	∞
Liquid permittivity (meas.)	± 5.0 %	Rectangular	√ 3	0.6	0.49	± 1.7 %	± 1.4 %	∞
Combined Uncertainty						± 12.1 %	± 11.9 %	330
Expanded Std. Uncertainty						± **24.3** %	± **23.8** %	

Table 7: Measurement uncertainties
Worst-Case uncertainty budget for DASY5 valid for 3G communication signals and frequency range 3 - 6 GHz. Probe calibration error reflects uncertainty of the EX3D probe. For specific tests and configurations, the uncertainty could be considerable smaller.

Relative DASY5 Uncertainty Budget for SAR Tests								
According to IEEE 1528/2011 and IEC62209-1/2011 (3-6GHz range)								
Error Description	Uncertainty Value	Probability Distribution	Divisor	c_i (1g)	c_i (10g)	Standard Uncertainty ± %, (1g)	Standard Uncertainty ± %, (10g)	v_i^2 or v_{eff}
Measurement System								
Probe calibration	± 6.6 %	Normal	1	1	1	± 6.6 %	± 6.6 %	∞
Axial isotropy	± 4.7 %	Rectangular	√ 3	0.7	0.7	± 1.9 %	± 1.9 %	∞
Hemispherical isotropy	± 9.6 %	Rectangular	√ 3	0.7	0.7	± 3.9 %	± 3.9 %	∞
Boundary effects	± 2.0 %	Rectangular	√ 3	1	1	± 1.2 %	± 1.2 %	∞
Probe linearity	± 4.7 %	Rectangular	√ 3	1	1	± 2.7 %	± 2.7 %	∞
System detection limits	± 1.0 %	Rectangular	√ 3	1	1	± 0.6 %	± 0.6 %	∞
Modulation Response	± 2.4 %	Rectangular	√ 3	1	1	± 1.4 %	± 1.4 %	∞
Readout electronics	± 0.3 %	Normal	1	1	1	± 0.3 %	± 0.3 %	∞
Response time	± 0.8 %	Rectangular	√ 3	1	1	± 0.5 %	± 0.5 %	∞
Integration time	± 2.6 %	Rectangular	√ 3	1	1	± 1.5 %	± 1.5 %	∞
RF ambient noise	± 3.0 %	Rectangular	√ 3	1	1	± 1.7 %	± 1.7 %	∞
RF ambient reflections	± 3.0 %	Rectangular	√ 3	1	1	± 1.7 %	± 1.7 %	∞
Probe positioner	± 0.8 %	Rectangular	√ 3	1	1	± 0.5 %	± 0.5 %	∞
Probe positioning	± 6.7 %	Rectangular	√ 3	1	1	± 3.9 %	± 3.9 %	∞
Max. SAR evaluation	± 4.0 %	Rectangular	√ 3	1	1	± 2.3 %	± 2.3 %	∞
Test Sample Related								
Device positioning	± 2.9 %	Normal	1	1	1	± 2.9 %	± 2.9 %	145
Device holder uncertainty	± 3.6 %	Normal	1	1	1	± 3.6 %	± 3.6 %	5
Power drift	± 5.0 %	Rectangular	√ 3	1	1	± 2.9 %	± 2.9 %	∞
Phantom and Set-up								
Phantom uncertainty	± 6.6 %	Rectangular	√ 3	1	1	± 3.8 %	± 3.8 %	∞
SAR correction	± 1.9 %	Rectangular	√ 3	1	0.84	± 1.1 %	± 0.9 %	∞
Liquid conductivity (meas.)	± 5.0 %	Rectangular	√ 3	0.78	0.71	± 2.3 %	± 2.0 %	∞
Liquid permittivity (meas.)	± 5.0 %	Rectangular	√ 3	0.26	0.26	± 0.8 %	± 0.8 %	∞
Temp. Unc. - Conductivity	± 3.4 %	Rectangular	√ 3	0.78	0.71	± 1.5 %	± 1.4 %	∞
Temp. Unc. - Permittivity	± 0.4 %	Rectangular	√ 3	0.23	0.26	± 0.1 %	± 0.1 %	∞
Combined Uncertainty						± 12.4 %	± 12.4 %	330
Expanded Std. Uncertainty						± **24.9** %	± **24.8** %	

Table 8: Measurement uncertainties
Worst-Case uncertainty budget for DASY5 assessed according to IEEE 1528/2011 and IEC 62209-1/2011 draft standards. The budget is valid for the frequency range 3GHz -6GHz and represents a worst-case analysis. For specific tests and configurations, the uncertainty could be considerable smaller.

6.1.13 Measurement uncertainty evaluation for System Check

Uncertainty of a System Performance Check with DASY5 System for the 0.3 - 3 GHz range								
Source of uncertainty	Uncertainty Value	Probability Distribution	Divisor	c_i (1g)	c_i (10g)	Standard Uncertainty ± %, (1g)	Standard Uncertainty ± %, (10g)	v_i^2 or v_{eff}
Measurement System								
Probe calibration	± 6.0 %	Normal	1	1	1	± 6.0 %	± 6.0 %	∞
Axial isotropy	± 4.7 %	Rectangular	√ 3	0.7	0.7	± 1.9 %	± 1.9 %	∞
Hemispherical isotropy	± 0.0 %	Rectangular	√ 3	0.7	0.7	± 0.0 %	± 0.0 %	∞
Boundary effects	± 1.0 %	Rectangular	√ 3	1	1	± 0.6 %	± 0.6 %	∞
Probe linearity	± 4.7 %	Rectangular	√ 3	1	1	± 2.7 %	± 2.7 %	∞
System detection limits	± 1.0 %	Rectangular	√ 3	1	1	± 0.6 %	± 0.6 %	∞
Readout electronics	± 0.3 %	Normal	1	1	1	± 0.3 %	± 0.3 %	∞
Response time	± 0.0 %	Rectangular	√ 3	1	1	± 0.0 %	± 0.0 %	∞
Integration time	± 0.0 %	Rectangular	√ 3	1	1	± 0.0 %	± 0.0 %	∞
RF ambient conditions	± 3.0 %	Rectangular	√ 3	1	1	± 1.7 %	± 1.7 %	∞
Probe positioner	± 0.4 %	Rectangular	√ 3	1	1	± 0.2 %	± 0.2 %	∞
Probe positioning	± 2.9 %	Rectangular	√ 3	1	1	± 1.7 %	± 1.7 %	∞
Max. SAR evaluation	± 1.0 %	Rectangular	√ 3	1	1	± 0.6 %	± 0.6 %	∞
Test Sample Related								
Dev. of experimental dipole	± 0.0 %	Rectangular	√ 3	1	1	± 0.0 %	± 0.0 %	∞
Source to liquid distance	± 2.0 %	Rectangular	√ 3	1	1	± 1.2 %	± 1.2 %	∞
Power drift	± 3.4 %	Rectangular	√ 3	1	1	± 2.0 %	± 2.0 %	∞
Phantom and Set-up								
Phantom uncertainty	± 4.0 %	Rectangular	√ 3	1	1	± 2.3 %	± 2.3 %	∞
SAR correction	± 1.9 %	Rectangular	√ 3	1	0.84	± 1.1 %	± 0.9 %	∞
Liquid conductivity (meas.)	± 5.0 %	Normal	1	0.78	0.71	± 3.9 %	± 3.6 %	∞
Liquid permittivity (meas.)	± 5.0 %	Normal	1	0.26	0.26	± 1.3 %	± 1.3 %	∞
Temp. unc. - Conductivity	± 1.7 %	Rectangular	√ 3	0.78	0.71	± 0.8 %	± 0.7 %	∞
Temp. unc. - Permittivity	± 0.3 %	Rectangular	√ 3	0.23	0.26	± 0.0 %	± 0.0 %	∞
Combined Uncertainty						± 9.1 %	± 8.9 %	330
Expanded Std. Uncertainty						± **18.2** %	± **17.9** %	

Table 9: Measurement uncertainties of the System Check with DASY5 (0.3-3GHz)

Uncertainty of a System Performance Check with DASY5 System for the 3 - 6 GHz range								
Source of uncertainty	Uncertainty Value	Probability Distribution	Divisor	c_i (1g)	c_i (10g)	Standard Uncertainty ± %, (1g)	Standard Uncertainty ± %, (10g)	v_i^2 or v_{eff}
Measurement System								
Probe calibration	± 6.6 %	Normal	1	1	1	± 6.6 %	± 6.6 %	∞
Axial isotropy	± 4.7 %	Rectangular	√ 3	0.7	0.7	± 1.9 %	± 1.9 %	∞
Hemispherical isotropy	± 0.0 %	Rectangular	√ 3	0.7	0.7	± 0.0 %	± 0.0 %	∞
Boundary effects	± 1.0 %	Rectangular	√ 3	1	1	± 0.6 %	± 0.6 %	∞
Probe linearity	± 4.7 %	Rectangular	√ 3	1	1	± 2.7 %	± 2.7 %	∞
System detection limits	± 1.0 %	Rectangular	√ 3	1	1	± 0.6 %	± 0.6 %	∞
Readout electronics	± 0.3 %	Normal	1	1	1	± 0.3 %	± 0.3 %	∞
Response time	± 0.0 %	Rectangular	√ 3	1	1	± 0.0 %	± 0.0 %	∞
Integration time	± 0.0 %	Rectangular	√ 3	1	1	± 0.0 %	± 0.0 %	∞
RF ambient conditions	± 3.0 %	Rectangular	√ 3	1	1	± 1.7 %	± 1.7 %	∞
Probe positioner	± 0.8 %	Rectangular	√ 3	1	1	± 0.5 %	± 0.5 %	∞
Probe positioning	± 6.7 %	Rectangular	√ 3	1	1	± 3.9 %	± 3.9 %	∞
Max. SAR evaluation	± 1.0 %	Rectangular	√ 3	1	1	± 0.6 %	± 0.6 %	∞
Test Sample Related								
Dev. of experimental dipole	± 0.0 %	Rectangular	√ 3	1	1	± 0.0 %	± 0.0 %	∞
Source to liquid distance	± 2.0 %	Rectangular	√ 3	1	1	± 1.2 %	± 1.2 %	∞
Power drift	± 3.4 %	Rectangular	√ 3	1	1	± 2.0 %	± 2.0 %	∞
Phantom and Set-up								
Phantom uncertainty	± 4.0 %	Rectangular	√ 3	1	1	± 2.3 %	± 2.3 %	∞
SAR correction	± 1.9 %	Rectangular	√ 3	1	0.84	± 1.1 %	± 0.9 %	∞
Liquid conductivity (meas.)	± 5.0 %	Normal	1	0.78	0.71	± 3.9 %	± 3.6 %	∞
Liquid permittivity (meas.)	± 5.0 %	Normal	1	0.26	0.26	± 1.3 %	± 1.3 %	∞
Temp. unc. - Conductivity	± 1.7 %	Rectangular	√ 3	0.78	0.71	± 0.8 %	± 0.7 %	∞
Temp. unc. - Permittivity	± 0.3 %	Rectangular	√ 3	0.23	0.26	± 0.0 %	± 0.0 %	∞
Combined Uncertainty						± 10.1 %	± 10.0 %	330
Expanded Std. Uncertainty						± **20.2** %	± **19.9** %	

Table 10: Measurement uncertainties of the System Check with DASY5 (3-6GHz)

Note: Worst case probe calibration uncertainty has been applied for all probes used during the measurements.

6.1.14 System check

The system check is performed for verifying the accuracy of the complete measurement system and performance of the software. The system check is performed with tissue equivalent material according to IEEE 1528. The following table shows system check results for all frequency bands and tissue liquids used during the tests (plot(s) see annex A).

System performence check (1000 mW)								
System validation Kit	Frequency	Target SAR_{1g} /mW/g (+/- 10%)	Target SAR_{10g} /mW/g (+/- 10%)	Measured SAR_{1g} mW/g	SAR_{1g} dev. %	Measured SAR_{10g} mW/g	SAR_{10g} dev. %	Measured date
D750V3 S/N: 1041	750 MHz body	8.75	5.79	8.25	-5.7%	5.47	-5.5%	2014-02-21
D835V2 S/N: 4d153	835 MHz body	9.40	6.12	9.93	5.6%	6.57	7.4%	2014-02-19
D835V2 S/N: 4d153	835 MHz body	9.40	6.12	9.67	2.9%	6.40	4.6%	2014-02-20
D1900V2 S/N: 5d009	1900 MHz body	40.90	21.70	39.10	-4.4%	20.60	-5.1%	2014-02-20
D2450V2 S/N: 710	2450 MHz body	51.20	23.90	52.60	2.7%	24.30	1.7%	2014-02-24
D5GHzV2 S/N: 1055	5200 MHz body	74.20	20.80	72.30	-2.6%	20.30	-2.4%	2014-02-26
D5GHzV2 S/N: 1055	5500 MHz body	77.90	21.70	73.30	-5.9%	20.30	-6.5%	2014-02-26
D5GHzV2 S/N: 1055	5800 MHz body	73.30	20.20	70.90	-3.3%	19.50	-3.5%	2014-02-26

Table 11: Results system check

6.1.15 System check procedure

The system check is performed by using a validation dipole which is positioned parallel to the planar part of the SAM phantom at the reference point. The distance of the dipole to the SAM phantom is determined by a plexiglass spacer. The dipole is connected to the signal source consisting of signal generator and amplifier via a directional coupler, N-connector cable and adaption to SMA. It is fed with a power of 1000 mW for frequencies below 2 GHz or 100 mW for frequencies above 2 GHz. To adjust this power a power meter is used. The power sensor is connected to the cable before the system check to measure the power at this point and do adjustments at the signal generator. At the outputs of the directional coupler both return loss as well as forward power are controlled during the validation to make sure that emitted power at the dipole is kept constant. This can also be checked by the power drift measurement after the test (result on plot).
System check results have to be equal or near the values determined during dipole calibration (target SAR in table above) with the relevant liquids and test system.

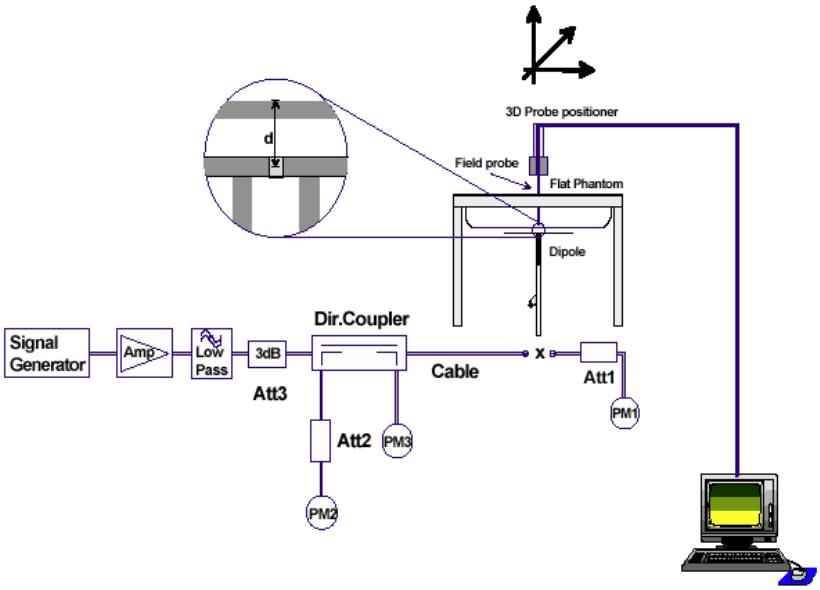

6.1.16 System validation

The system validation is performed in a similar way as a system check. It needs to be performed once a SAR measurement system has been established and allows an evaluation of the system accuracy with all components used together with the specified system. It has to be repeated at least once a year or when new system components are used (DAE, probe, phantom, dipole, liquid type).
In addition to the procedure used during system check a system validation also includes checks of probe isotropy, probe modulation factor and RF signal.

The following table lists the system validations relevant for this test report:

Probe Calibration Point	Test	DASY	Dipole	Probe	Calibrated signal type(s)	DAE unit	Validation done
f / MHz	System	SW	Type / SN	Type / SN		Type / SN	Body tissue simulant
750	Saarbrücken / SAR-1	V52.8.7	D750V2 / 1041	ES3DV3 / 3320	CW	DAE3/ 413	2014-01
835	Saarbrücken / SAR-1	V52.8.7	D835V2 / 4d153	ES3DV3 / 3320	CW	DAE3/ 413	2014-01
1900	Saarbrücken / SAR-1	V52.8.7	D1900V2 / 5d009	ES3DV3 / 3320	CW	DAE3 / 413	2014-01
2450	Saarbrücken / SAR-1	V52.8.7	D2450V2 / 710	ES3DV3 / 3320	CW	DAE3 / 413	2014-01
5200	Saarbrücken / SAR-2	V52.8.7	D5GHzV2 / 1055	EX3DV4 / 3944	CW	DAE3/ 477	2014-01
5500	Saarbrücken / SAR-2	V52.8.7	D5GHzV2 / 1055	EX3DV4 / 3944	CW	DAE3/ 477	2014-01
5800	Saarbrücken / SAR-2	V52.8.7	D5GHzV2 / 1055	EX3DV4 / 3944	CW	DAE3/ 477	2014-01

7 Detailed Test Results

The DUT is equipped with two proximity sensors to reduce the output power if a person is close to the main antenna. The position of the sensors and antenna are as shown in the graphic.

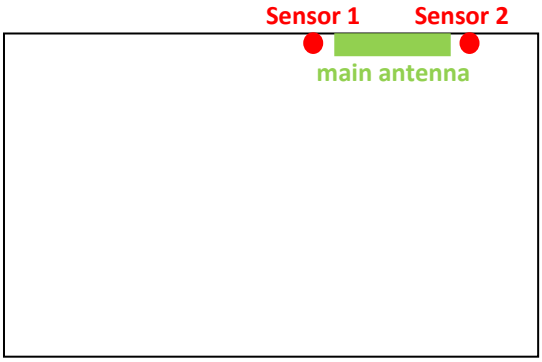

According to KDB 616217 D04 SAR for laptop and tablets v01r01 the functionality of the sensors has to be approved for different aspects:

- Triggering distances
- Sensor coverage of the relevant area
- Sensor functionality in tilted positions
- Safety mechanisms in case of sensor Malfunction
- Material dependency of the triggering distances

7.1.1 Proximity sensor test result overview

The proximity sensor tests were performed by the applicant itself. The detailed test results are attached in **Annex E: Proximity sensor data.**

Final verdicts of proximity testing are given in the following paragraphs.

7.1.2 Power reduction:

When one of the sensors is triggered the power will be reduced according to the following table:

Operating mode	Power reduction [dB]
GSM 850	> 4
GSM 1900	> 9
UMTS FDD II	> 11.5
UMTS FDD V	> 4.5
LTE FDD 17	> 4.0

More detailed information can be seen in **CONDUCTED MEASUREMENTS RESULTS.**

7.1.3 Resulting test positions for SAR measurements.

The smallest separation distance determined during triggering distance, sensor coverage and tilt angle test is selected for SAR measurements. Final verdict of safety distance:

position	triggering distance	coverage	tilting	resulting measurement distance for SAR
top edge	16	16	15	**15 mm**
rear	18	18	---	**17 mm**

7.1.4 Safety measures in case of sensor malfunctions

The operational description contains information explaining how the device remains compliant in the event of a sensor malfunction.

7.2 Conducted power measurements

For the measurements a Rohde & Schwarz Radio Communication Tester CMU 200 was used.
The output power was measured using an integrated RF connector and attached RF cable.
The conducted output power was also checked before and after each SAR measurement. The resulting power values were within a 0.2 dB tolerance of the values shown below.

Note: CMU200 measures GSM peak and average output power for active timeslots.
For SAR the time based average power is relevant. The difference in-between depends on the duty cycle of the TDMA signal:

No. of timeslots	***1***	***2***	***3***	***4***
Duty Cycle	1 : 8	1: 4	1 : 2.66	1 : 2
time based avg. power compared to slotted avg. power	- 9 dB	- 6 dB	- 4.25 dB	- 3 dB

The signalling modes differ as follows :

mode	***coding scheme***	***modulation***
GPRS	CS1 to CS4	GMSK
EGPRS (EDGE)	MCS1 to MCS4	GMSK
EGPRS (EDGE)	MCS5 to MCS9	8PSK

Apart from modulation change (GMSK/8PSK) coding schemes differ in code rate without influence on the RF signal. Therefore one coding scheme per mode was selected for conducted power measurements.

7.2.1 Conducted power measurements GSM 850 MHz

Channel / frequency	modulation	timeslots	slotted avg. Power (dBm)			calculated time based avg. Power (dBm)	
			full	**back off**	**diff.**	full	**back off**
128 / 824.2 MHz	GMSK	1	33.5	**28.7**	4.8	24.5	**19.7**
190 / 836.6 MHz	GMSK	1	33.5	**28.4**	5.1	24.5	**19.4**
251 / 848.0 MHz	GMSK	1	33.3	**28.4**	4.9	24.3	**19.4**
128 / 824.2 MHz	**GMSK**	**2**	**31.1**	25.2	5.9	**25.1**	19.2
190 / 836.6 MHz	**GMSK**	**2**	**30.7**	25.0	5.7	**24.7**	19.0
251 / 848.0 MHz	**GMSK**	**2**	**30.5**	24.9	5.6	**24.5**	18.9
128 / 824.2 MHz	GMSK	3	28.8	23.6	5.2	24.55	19.35
190 / 836.6 MHz	GMSK	3	28.6	23.3	5.3	24.35	19.05
251 / 848.0 MHz	GMSK	3	28.6	23.1	5.5	24.35	18.85
128 / 824.2 MHz	GMSK	4	27.9	21.8	6.1	24.9	18.8
190 / 836.6 MHz	GMSK	4	27.6	21.0	6.6	24.6	18.0
251 / 848.0 MHz	GMSK	4	27.3	21.0	6.3	24.3	18.0
128 / 824.2 MHz	8PSK	1	27.6	27.8	-0.2	18.6	18.8
190 / 836.6 MHz	8PSK	1	27.6	27.6	0.0	18.6	18.6
251 / 848.0 MHz	8PSK	1	27.4	27.4	0.0	18.4	18.4
128 / 824.2 MHz	8PSK	2	25.8	24.1	1.7	19.8	18.1
190 / 836.6 MHz	8PSK	2	25.5	23.9	1.6	19.5	17.9
251 / 848.0 MHz	8PSK	2	25.4	23.7	1.7	19.4	17.7
128 / 824.2 MHz	8PSK	3	24.8	22.8	2.0	20.55	18.55
190 / 836.6 MHz	8PSK	3	24.7	22.6	2.1	20.45	18.35
251 / 848.0 MHz	8PSK	3	24.5	22.4	2.1	20.25	18.15
128 / 824.2 MHz	8PSK	4	22.6	21.4	1.2	19.6	18.4
190 / 836.6 MHz	8PSK	4	22.5	21.1	1.4	19.5	18.1
251 / 848.0 MHz	8PSK	4	22.4	21.0	1.4	19.4	18.0

Table 12: Test results conducted power measurement GSM 850 MHz

7.2.2 Conducted power measurements GSM 1900 MHz

Channel / frequency	modulation	timeslots	slotted avg. Power (dBm)			calculated time based avg. Power (dBm)	
			full	**back off**	**diff.**	full	**back off**
512 / 1850.2 MHz	GMSK	1	30.7	21.3	9.4	21.7	12.3
661 / 1880.0 MHz	GMSK	1	30.4	21.1	9.3	21.4	12.1
810 / 1909.8 MHz	GMSK	1	30.4	21.0	9.4	21.4	12.0
512 / 1850.2 MHz	GMSK	2	27.6	**18.4**	9.2	21.6	**12.4**
661 / 1880.0 MHz	GMSK	2	27.4	**18.4**	9.0	21.4	**12.4**
810 / 1909.8 MHz	GMSK	2	27.4	**18.3**	9.1	21.4	**12.3**
512 / 1850.2 MHz	GMSK	3	26.6	16.4	10.2	22.35	12.15
661 / 1880.0 MHz	GMSK	3	26.3	16.2	10.1	22.05	11.95
810 / 1909.8 MHz	GMSK	3	26.3	16.1	10.2	22.05	11.85
512 / 1850.2 MHz	**GMSK**	**4**	**25.6**	15.4	10.2	**22.6**	12.4
661 / 1880.0 MHz	**GMSK**	**4**	**25.3**	15.2	10.1	**22.3**	12.2
810 / 1909.8 MHz	**GMSK**	**4**	**25.3**	15.1	10.2	**22.3**	12.1
512 / 1850.2 MHz	8PSK	1	26.6	21.1	5.5	17.6	12.1
661 / 1880.0 MHz	8PSK	1	26.4	20.9	5.5	17.4	11.9
810 / 1909.8 MHz	8PSK	1	26.4	21.0	5.4	17.4	12.0
512 / 1850.2 MHz	8PSK	2	24.5	18.0	6.5	18.5	12.0
661 / 1880.0 MHz	8PSK	2	24.5	17.9	6.6	18.5	11.9
810 / 1909.8 MHz	8PSK	2	24.4	17.9	6.5	18.4	11.9
512 / 1850.2 MHz	8PSK	3	23.7	16.2	7.5	19.45	11.95
661 / 1880.0 MHz	8PSK	3	23.5	16.0	7.5	19.25	11.75
810 / 1909.8 MHz	8PSK	3	23.5	16.0	7.5	19.25	11.75
512 / 1850.2 MHz	8PSK	4	22.7	14.7	8.0	19.7	11.7
661 / 1880.0 MHz	8PSK	4	22.3	14.5	7.8	19.3	11.5
810 / 1909.8 MHz	8PSK	4	22.4	14.6	7.8	19.4	11.6

Table 13: Test results conducted power measurement GSM 1900 MHz

7.2.3 Justification of SAR measurements in GSM mode

SAR measurements were performed in the configuration with highest calculated time based averaged output power.

7.2.4 Conducted power measurements WCDMA FDD V (850 MHz)

Max. RMS output power 850 MHz (FDD V) / dBm									
	Channel / frequency								
	4132 / 826.4 MHz			4182 / 836.6 MHz			4233 / 846.6 MHz		
mode	full	**back off**	**diff.**	full	**back off**	**diff.**	full	**back off**	**diff.**
RMC 12.2 kbit/s	**24.8**	**19.1**	**5.7**	**24.8**	**19.1**	**5.7**	**24.8**	**19.1**	**5.7**
RMC 64 kbit/s	24.7	19.1	5.6	24.6	19.1	5.5	24.7	19.1	5.6
RMC 144 kbit/s	24.7	19.0	5.7	24.7	19.1	5.6	24.7	19.1	5.6
RMC 384 kbit/s	24.7	19.0	5.7	24.7	19.1	5.6	24.6	19.0	5.6
AMR 4.75 kbit/s	24.7	**19.0**	5.7	24.7	**19.0**	5.7	24.7	**19.0**	5.7
AMR 5.15 kbit/s	24.7	18.9	5.8	24.7	19.0	5.7	24.6	19.0	5.6
AMR 5.9 kbit/s	24.8	19.0	5.8	24.7	19.1	5.6	24.7	19.0	5.7
AMR 6.7 kbit/s	24.7	19.1	5.6	24.6	19.0	5.6	24.6	19.0	5.6
AMR 7.4 kbit/s	24.7	19.0	5.7	24.6	19.1	5.5	24.6	19.1	5.5
AMR 7.95 kbit/s	24.7	19.0	5.7	24.7	19.1	5.6	24.7	19.0	5.7
AMR 10.2 kbit/s	24.7	19.1	5.6	24.6	19.0	5.6	24.6	19.0	5.6
AMR 12.2 kbit/s	24.8	19.0	5.8	24.7	19.1	5.6	24.7	19.0	5.7
HSDPA Sub test 1	**24.2**	**18.5**	**5.7**	**24.2**	**18.5**	**5.7**	**24.2**	**18.6**	**5.6**
HSDPA Sub test 2	22.6	16.9	5.7	22.6	17.0	5.6	22.5	17.0	5.5
HSDPA Sub test 3	22.0	15.8	6.2	21.9	15.8	6.1	21.8	15.7	6.1
HSDPA Sub test 4	21.9	15.7	6.2	21.8	15.6	6.2	21.7	15.6	6.1
DC-HSDPA Sub test 1	**24.2**	**18.5**	**5.7**	**24.2**	**18.4**	**5.8**	**24.2**	**18.5**	**5.7**
DC-HSDPA Sub test 2	24.1	18.5	5.6	24.2	18.4	5.8	24.1	18.4	5.7
DC-HSDPA Sub test 3	23.6	17.9	5.7	23.5	17.8	5.7	23.4	17.8	5.6
DC-HSDPA Sub test 4	23.5	17.8	5.7	23.5	17.8	5.7	23.5	17.7	5.8
HSUPA Sub test 1	24.2	18.4	5.8	24.2	18.4	5.8	24.2	18.5	5.7
HSUPA Sub test 2	22.3	16.4	5.9	22.4	16.4	6.0	22.2	16.3	5.9
HSUPA Sub test 3	23.4	17.5	5.9	23.6	17.4	6.2	23.5	17.4	6.1
HSUPA Sub test 4	22.2	16.3	5.9	22.3	16.3	6.0	22.1	16.2	5.9
HSUPA Sub test 5	**24.1**	**18.3**	**5.8**	**24.1**	**18.4**	**5.7**	**24.2**	**18.4**	**5.8**

Table 14: Test results conducted power measurement UMTS FDD V 850MHz

7.2.5 Conducted power measurements WCDMA FDD II (1900 MHz)

Max. RMS output power FDD II (1900MHz) / dBm									
	Channel / frequency								
	9262 / 1852.4 MHz			9400 / 1880.0 MHz			9538 / 1907.6 MHz		
mode	full	**back off**	**diff.**	full	**back off**	**diff.**	full	**back off**	**diff.**
RMC 12.2 kbit/s	**23.9**	**12.1**	**11.8**	**24.0**	**12.2**	**11.8**	**23.9**	**11.7**	**12.2**
RMC 64 kbit/s	23.8	12.0	11.8	24.0	12.1	11.9	23.9	11.7	12.2
RMC 144 kbit/s	23.9	12.0	11.9	24.0	12.1	11.9	23.8	11.7	12.1
RMC 384 kbit/s	23.8	12.0	11.8	23.9	12.2	11.7	23.8	11.7	12.1
AMR 4.75 kbit/s	23.8	**12.1**	11.7	24.0	**12.2**	11.8	23.9	**11.7**	12.2
AMR 5.15 kbit/s	23.8	12.0	11.8	24.0	12.1	11.9	23.8	11.6	12.2
AMR 5.9 kbit/s	23.8	12.0	11.8	23.9	12.1	11.8	23.8	11.6	12.2
AMR 6.7 kbit/s	23.8	12.1	11.7	23.9	12.2	11.7	23.8	11.7	12.1
AMR 7.4 kbit/s	23.8	12.1	11.7	23.9	12.1	11.8	23.8	11.7	12.1
AMR 7.95 kbit/s	23.8	12.0	11.8	23.9	12.1	11.8	23.8	11.6	12.2
AMR 10.2 kbit/s	23.9	12.0	11.9	23.9	12.1	11.8	23.8	11.6	12.2
AMR 12.2 kbit/s	23.8	12.0	11.8	23.9	12.1	11.8	23.9	11.6	12.3
HSDPA Sub test 1	**23.3**	**11.4**	**11.9**	**23.4**	**11.4**	**12.0**	**23.4**	**10.8**	**12.6**
HSDPA Sub test 2	22.9	10.0	12.9	23.0	9.9	13.1	23.0	9.6	13.4
HSDPA Sub test 3	22.0	8.4	13.6	21.9	8.3	13.6	22.1	8.3	13.8
HSDPA Sub test 4	21.8	8.5	13.3	22.0	8.5	13.5	22.0	8.5	13.5
DC-HSDPA Sub test 1	**23.3**	**11.3**	**12.0**	**23.3**	**11.4**	**11.9**	**23.3**	**10.8**	**12.5**
DC-HSDPA Sub test 2	23.2	11.2	12.0	23.2	11.3	11.9	23.3	10.7	12.6
DC-HSDPA Sub test 3	22.6	10.6	12.0	22.5	10.5	12.0	22.6	9.8	12.8
DC-HSDPA Sub test 4	22.5	10.5	12.0	22.6	10.6	12.0	22.6	9.7	12.9
HSUPA Sub test 1	23.3	11.3	12.0	23.3	11.4	11.9	23.4	10.8	12.6
HSUPA Sub test 2	21.6	9.3	12.3	21.5	9.4	12.1	21.5	9.7	11.8
HSUPA Sub test 3	22.5	10.4	12.1	22.4	10.4	12.0	22.3	10.3	12.0
HSUPA Sub test 4	21.4	9.2	12.2	21.4	9.4	12.0	21.5	9.6	11.9
HSUPA Sub test 5	**23.3**	**11.4**	**11.9**	**23.2**	**11.3**	**11.9**	**23.3**	**10.9**	**12.4**

Table 15: Test results conducted power measurement UMTS FDD II 1900MHz

Remark: None of the HSDPA/HSUPA settings leads to conducted power values exceeding the conducted power in RMC mode by more than 0.25 dB.
Therefore no additional SAR measurements were performed in HSDPA/HSUPA mode.

7.2.6 Test-set-up information for WCDMA / HSPDA / HSUPA

a) WCDMA RMC

In RMC (reference measurement channel) mode the conducted power at 4 different bit rates was measured. They correspond with the used spreading factors as follows:

Bit rate	***12.2 kbit/s***	***64 kbit/s***	***144 kbit/s***	***384 kbit/s***
Spreading factor (SF)	64	16	8	4

In RMC mode only DPCCH and DPDCH are active. As bit rate changes do not influence the relative power of any code channel the measured RMS output power remains on the same level which is set to maximum by TPC (Transmit power control) pattern type 'All 1'.

b) HSDPA

HSDPA adds the HS-DPCCH in uplink as a control channel for high speed data transfer in downlink.
In HSDPA mode 4 sub-tests are defined by 3GPP 34.121 according to the following table:

Sub-test	β_c	β_d	β_d **(SF)**	β_c/β_d	β_{hs} (1)	**CM(dB)** (2)
1	2/15	15/15	64	2/15	4/15	0.0
2	12/15 (3)	15/15 (3)	64	12/15 (3)	24/15	1.0
3	15/15	8/15	64	15/8	30/15	1.5
4	15/15	4/15	64	15/4	30/15	1.5
Note 1: Δ_{ACK}, Δ_{NACK}, Δ_{CQI} = 8 $\Longleftrightarrow$ $A_{hs} = \beta_{hs}/\beta_c = 30/15 \Longleftrightarrow \beta_{hs} = 30/15 * \beta_c$ Note 2 : CM = 1 for β_c/β_d = 12/15, β_{hs}/β_c = 24/15 Note 3 : For subtest 2 the β_c/β_d ratio of 12/15 for the TFC during the measurement period (TF1, TF0) is achieved by setting the signalled gain factors for the reference TFC (TF1,TF1) to β_c = 11/15 and β_d = 15/15						

Table 16: Sub-tests for UMTS Release 5 HSDPA

The β_c and β_d gain factors for DPCCH and DPDCH were set according to the values in the above table, β_{hs} for HS-DPCCH is set automatically to the correct value when Δ_{ACK}, Δ_{NACK}, Δ_{CQI} = 8. The variation of the β_c/β_d ratio causes a power reduction at sub-tests 2 - 4.
The measurements were performed with a Fixed Reference Channel (FRC) and H-Set 1 QPSK.

Parameter	***Value***
Nominal average inf. bit rate	534 kbit/s
Inter-TTI Distance	3 TTI's
Number of HARQ Processes	2 Processes
Information Bit Payload	3202 Bits
MAC-d PDU size	336 Bits
Number Code Blocks	1 Block
Binary Channel Bits Per TTI	4800 Bits
Total Available SMLs in UE	19200 SMLs
Number of SMLs per HARQ Process	9600 SMLs
Coding Rate	0.67
Number of Physical Channel Codes	5

Table 17: settings of required H-Set 1 QPSK acc. to 3GPP 34.121

c) DC-HSDPA (3GPP Release 8)

Dual Cell – HSDPA has been signalized using the following settings for connection setup:

Parameter During Connection Setup	Value
P-CPICH_Ec/Ior	-10 dB
P-CCPCH	-12
SCH_Ec/Ior	-12
PICH_Ec/Ior	-15
HS-PDSCH	off
HS-SCCH_1	off
DPCH_Ec/Ior	-5
OCNS_Ec/Ior	-3.1

Table 18: Downlink Physical Channels according to 3GPP 34.121 Table E.5.0

The fixed reference channel has been set to H-set 12 according to 3GPP TS 34.121 Table C.8.1.12:

Parameter	Unit	Value
Nominal Average Inf. Bit Rate	kbit/s	60
Inter-TTI Distance	TTI's	1
Information Bit Payload (N_{INF})	Bits	120
Number Code Blocks	Blocks	1
Binary Channel Bits Per TTI	Bits	960
Total Available SML's in UE	SML's	19200
Number of SML's per HARQ Process	SML's	3200
Coding Rate		0.15
Number of Physical Channel Codecs	Codecs	1
Modulation		QPSK
Note 1: The RMC is intended to be used for DC-HSDPA mode and both cells shall transmit with identical parameters as listed in the table. Note 2: Maximum number of transmission is limited to 1, i.e., retransmission is not allowed. The redundancy and constellation version 0 shall be used.		

Table 19: H-Set 12 QPSK configuration

The same Sub-test settings as for Release 5 HSDPA were used for the tests.

d) HSUPA

In HSUPA mode additional code channels (E-DPCCH, E-DPDCHn) are added for data transfer in uplink at higher bit rates.

5 sub-tests are defined by 3GPP 34.121 according to the following table :

Sub-test	β_c	β_d	β_d (SF)	β_c/β_d	β_{hs} (1)	β_{ec}	β_{ed}	β_{ec} (SF)	β_{ed} (code)	CM (2) (dB)	MPR (dB)	AG (4) Index	E-TFCI
1	11/15 (3)	15/15 (3)	64	11/15 (3)	22/15	209/225	1039/225	4	1	1.0	0.0	20	75
2	6/15	15/15	64	6/15	12/15	12/15	94/75	4	1	3.0	2.0	12	67
3	15/15	9/15	64	15/9	30/15	30/15	β_{ed1}:47/15 β_{ed2}:47/15	4	2	2.0	1.0	15	92
4	2/15	15/15	64	2/15	4/15	2/15	56/75	4	1	3.0	2.0	17	71
5	15/15 (4)	15/15 (4)	64	15/15 (4)	30/15	24/15	134/15	4	1	1.0	0.0	21	81

Note 1: Δ_{ACK}, Δ_{NACK}, Δ_{CQI} = 8 $\Longleftrightarrow$ $A_{hs} = \beta_{hs}/\beta_c$ = 30/15 $\Longleftrightarrow$ β_{hs} = 30/15 * β_c
Note 2 : CM = 1 for β_c/β_d = 12/15, β_{hs}/β_c = 24/15. For all other combinations of DPDCH, DPCCH, HS-DPCCH, E-DPDCH and E-DPCCH the MPR is based on the relative CM difference
Note 3 : For subtest 1 the β_c/β_d ratio of 11/15 for the TFC during the measurement period (TF1, TF0) is achieved by setting the signalled gain factors for the reference TFC (TF1,TF1) to β_c = 10/15 and β_d = 15/15
Note 4 : For subtest 5 the β_c/β_d ratio of 15/15 for the TFC during the measurement period (TF1, TF0) is achieved by setting the signalled gain factors for the reference TFC (TF1,TF1) to β_c = 14/15 and β_d = 15/15
Note 5 : Testing UE using E-DPDCH Physical Layer category 1 Sub-test 3 is not required according to TS 25.306 Table 5.1g
Note 6 : β_{ed} can not be set directly; it is set by Absolute Grant Value

Table 20: Subtests for UMTS Release 6 HSUPA

To achieve the settings above some additional procedures were defined by 3GPP 34.121. Those have been included in an application note for the CMU200 and were exactly followed :

- Test mode connection (BS signal tab) :
RMC 12.2 kbit/s + HSPA 34.108 with loop mode 1
- HS-DSCH settings (BS signal tab):
- FRC with H-set 1 QPSK
- ACK-NACK repetition factor = 3
- CQI feedback cycle = 4ms
- CQI repetition factor = 2
- HSUPA-specific signalling settings (UE signal tab) :
- E-TFCI table index = 0
- E-DCH minimum set E-TFCI = 9
- Puncturing limit non-max = 0.84
- max. number of channelisation codes = 2x SF4
- Initial Serving Grant Value = Off
- HSDPA and HSUPA Gain factors (UE signal tab)

Sub-test	β_c	β_d	Δ_{ACK}, Δ_{NACK}, Δ_{CQI}	ΔE–DPCCH)*
1	10	15	8	6
2	6	15	8	8
3	15	9	8	8
4	2	15	8	5
5	14	15	8	7

)* : β_{ec} and β_{ed} ratios (relative to β_c and β_d) are set by ΔE–DPCCH

- HSUPA Reference E-TFCIs (UE signal tab > HSUPA gain factors) :

Sub-test	**1, 2, 4, 5**				
Number of E-TFCIs	5				
Reference E-TFCI	11	67	71	75	81
Reference E-TFCI power offset	4	18	23	26	27

Sub-test	**3**	
Number of E-TFCIs	2	
Reference E-TFCI	11	92
Reference E-TFCI power offset	4	18

- HSUPA-specific generator parameters (BS Signal tab > HSUPA > E-AGCH > AG Pattern)

Sub-test	***Absolute Grant Value (AG Index)***
1	20
2	12
3	15
4	17
5	21

- Power Level settings (BS Signal tab > Node B-settings):
- Level reference : Output Channel Power (Ior)
- Output Channel Power (Ior) : -86 dBm

- Downlink Physical Channel Settings (BS signal tab)
- P-CPICH : -10 dB
- S-CPICH : Off
- P-SCH : -15 dB
- S-SCH : -15 dB
- P-CCPCH : -12 dB
- S-CCPCH : -12 dB
- PICH : -15 dB
- AICH : -12 dB
- DPDCH : -10 dB
- HS-SCCH : -8 dB
- HS-PDSCH : -3 dB
- E-AGCH : -20 dB
- E-RGCH/E-HICH - 20 dB
- E-RGCH Active : Off

The settings above were stored once for each sub-test and recalled before the measurement.

HSUPA test procedure :

To reach maximum output power in HSUPA mode the following procedures were followed:

3 different TPC patterns were defined :
Set 1 : Closed loop with target power 10 dBm
Set 2 : Single Pattern+Alternating with binary pattern '11111' for 1 dB steps 'up'
Set 3 : Single Pattern+Alternating with binary pattern '00000' for 1 dB steps 'down'

After recalling a certain HSUPA sub-test the HSUPA E-AGCH graph with E-TFCI event counter is displayed. After starting with the closed loop command the power is increased in 1 dB steps by activating pattern set 2 until the UE decreases the transmitted E-TFCI.
At this point set 3 is activated once to reduce the output power to the value at which the original E-TFCI, which is required for the sub-test, appears again.

For conducted power measurements the same steps are repeated in the power menu to read out the corresponding maximum RMS output power with the target E-TFCI.
For SAR measurements it is useful to switch to Code Domain Power vs. Time display.
Here the CMU200 shows relative power values (max. and min.) of each code channel which should roughly correspond to the numerators of the gain factors e.g. :

Sub-test	β_c	β_d	β_{hs}	β_{ec}	β_{ed}
5	15	15	30	24	134

By this way a surveillance of signalling conditions is possible to make sure that HSUPA code channels are active during the complete SAR measurement.

7.2.7 Conducted power measurements LTE FDD 17 700 MHz

Bandwidth (MHz)	Channel / Frequency (MHz)	Resource block allocation	P_{avg} (dBm)	P_{avg} (dBm) back off	dev. dB	P_{avg} (dBm)	P_{avg} (dBm) back off	dev. dB
			QPSK	QPSK		16-QAM	16-QAM	
5.0	23755 / 706.5	1 RB low	23.4	18.3	5.1	22.4	18.2	4.2
		1 RB mid	23.4	18.4	5.0	22.4	18.3	4.1
		1 RB high	23.5	18.3	5.2	22.5	18.3	4.2
		50% RB low	22.4	18.4	4.0	21.4	18.5	2.9
		50% RB mid	22.4	18.3	4.1	21.4	18.3	3.1
		50% RB high	22.5	18.3	4.2	21.5	18.3	3.2
		100% RB	22.3	18.3	4.0	21.4	18.3	3.1
	23790 / 710.0	1 RB low	23.3	18.2	5.1	22.8	18.7	4.1
		1 RB mid	23.4	18.3	5.1	22.9	18.7	4.2
		1 RB high	23.4	18.3	5.1	22.8	18.6	4.2
		50% RB low	22.5	18.3	4.2	21.5	18.2	3.3
		50% RB mid	22.5	18.3	4.2	21.5	18.3	3.2
		50% RB high	22.5	18.3	4.2	21.4	18.3	3.1
		100% RB	22.4	18.3	4.1	21.4	18.3	3.1
	23825 / 713.5	1 RB low	23.4	18.3	5.1	22.3	18.0	4.3
		1 RB mid	23.4	18.4	5.0	22.2	18.2	4.0
		1 RB high	23.4	18.3	5.1	22.2	18.1	4.1
		50% RB low	22.4	18.2	4.2	21.4	18.4	3.0
		50% RB mid	22.5	18.2	4.3	21.4	18.3	3.1
		50% RB high	22.5	18.2	4.3	21.4	18.3	3.1
		100% RB	22.4	18.2	4.2	21.5	18.3	3.2
10.0	23780 / 709.0	1 RB low	23.4	18.4	5.0	22.5	18.4	4.1
		1 RB mid	23.4	18.3	5.1	22.6	18.5	4.1
		1 RB high	**23.4**	**18.5**	4.9	22.6	18.6	4.0
		50% RB low	22.3	**18.4**	3.9	21.4	18.3	3.1
		50% RB mid	22.4	18.3	4.1	21.5	18.3	3.2
		50% RB high	**22.4**	18.3	4.1	21.5	18.3	3.2
		100% RB	22.4	18.3	4.1	21.4	18.4	3.0
	23790 / 710.0	1 RB low	23.4	**18.3**	5.1	22.2	18.1	4.1
		1 RB mid	23.4	18.3	5.1	22.3	18.0	4.3
		1 RB high	**23.5**	18.3	5.2	22.2	18.0	4.2
		50% RB low	22.4	18.3	4.1	21.5	18.3	3.2
		50% RB mid	22.5	18.3	4.2	21.5	18.4	3.1
		50% RB high	**22.5**	**18.3**	4.2	21.5	18.4	3.1
		100% RB	**22.5**	18.3	4.2	21.4	18.3	3.1
	23800 / 711.0	1 RB low	23.4	**18.4**	5.0	22.2	18.1	4.1
		1 RB mid	23.5	18.3	5.2	22.3	18.1	4.2
		1 RB high	**23.5**	18.3	5.2	22.3	18.1	4.2
		50% RB low	22.4	**18.3**	4.1	21.4	18.3	3.1
		50% RB mid	22.4	18.4	4.0	21.4	18.3	3.1
		50% RB high	**22.4**	18.3	4.1	21.4	18.2	3.2
		100% RB	22.4	18.3	4.1	21.4	18.3	3.1

Table 21: Test results conducted power measurement LTE FDD 17 700 MHz.

7.2.8 Justification of SAR measurements in LTE mode

According to Chapter 5 'SAR test procedures for LTE devices of FCC KDB Publication 941225 D05 the following test configurations for standalone measurements of the largest channel bandwidth (chapter 5.2) had to be taken into consideration:

5.2.1. QPSK with 1 RB allocation
Start with the largest channel bandwidth and measure SAR for QPSK with 1 RB allocation, using the RB offset and *required test channel* combination with the highest maximum output power for RB offsets at the upper edge, middle and lower edge of each *required test channel*. When the *reported* SAR is ≤ 0.8 W/kg, testing of the remaining RB offset configurations and *required test channels* is not required for 1 RB allocation; otherwise, SAR is required for the remaining *required test channels* and only for the RB offset configuration with the highest output power for that channel.6 When the *reported* SAR of a *required test channel* is > 1.45 W/kg, SAR is required for all three RB offset configurations for that *required test channel*.

5.2.2. QPSK with 50% RB allocation
The procedures required for 1 RB allocation in 5.2.1 are applied to measure the SAR for QPSK with 50% RB allocation.

5.2.3. QPSK with 100% RB allocation
For QPSK with 100% RB allocation, SAR is not required when the highest maximum output power for 100 % RB allocation is less than the highest maximum output power in 50% and 1 RB allocations and the highest *reported* SAR for 1 RB and 50% RB allocation in 5.2.1 and 5.2.2 ≤ 0.8 W/kg. Otherwise, SAR is measured for the highest output power channel and if the *reported* SAR is > 1.45 W/kg, the remaining *required test channels* must also be tested.

5.2.4. Higher order modulations
For each modulation besides QPSK; e.g., 16-QAM, 64-QAM, apply the QPSK procedures in sections 5.2.1, 5.2.2 and 5.2.3 to determine the QAM configurations that may need SAR measurement. For each configuration identified as required for testing, SAR is required only when the highest maximum output power for the configuration in the higher order modulation is > ½ dB higher than the same configuration in QPSK or when the *reported* SAR for the QPSK configuration is > 1.45 W/kg.

Testing of other channel bandwidths was not necessary because the output power of equivalent channel configurations was less than ½ dB larger compared to the largest channel bandwidth and reported SAR was < 1.45 W/kg.

Conducted and radiated measurements were performed with the maximum number of bundled TTIs supported by the DUT (see section 2.4 for details).

7.2.9 MPR information in LTE mode

There is a permanently applied MPR implemented by the manufacturer.
MPR is enabled for this device according to 3GPP TS36.101.

Modulation	Channel bandwidth / resource block configuration						Target MPR	3 GPP MPR
	1.4 MHz	3 MHz	5 MHz	10 MHz	15 MHz	20 MHz		
QPSK	> 5	> 4	> 8	> 12	> 16	> 18	1	≤ 1
16QAM	≤ 5	≤ 4	≤ 8	≤ 12	≤ 16	≤ 18	1	≤ 1
16QAM	> 5	> 4	> 8	> 12	> 16	> 18	2	≤ 2

Therefore there is no power reduction at 1.4 MHz bandwidth with 50% RB allocation (3 RBs).

Additional differences in conducted power are not caused by implemented MPR but depend on measurement uncertainty and allowable tolerances per 3GPP or tune-up.
A-MPR was disabled for all SAR tests.

7.2.1 Conducted power measurements WLAN 2.4 GHz

802.11b		maximum average conducted output power [dBm]			
Band	channel	1Mbps	2Mbps	5.5Mbps	11Mbps
2450MHz	1	10.6	10.7	10.6	10.3
	6	10.4	10.3	10.4	10.2
	11	10.1	10.2	10.2	10.1

Table 22: Test results conducted power measurement 802.11b

802.11g		maximum average conducted output power [dBm]							
Band	channel	6Mbps	9Mbps	12Mbps	18Mbps	24Mbps	36Mbps	48Mbps	54Mbps
2450MHz	1	9.8	9.9	9.6	9.4	9.6	9.4	8.9	8.9
	6	9.8	9.8	9.7	9.6	9.5	9.2	8.8	8.8
	11	9.8	9.6	10.0	9.7	9.6	9.4	8.8	8.6

Table 23: Test results conducted power measurement 802.11g

802.11n HT-20		maximum average conducted output power [dBm]							
Band	channel	MCS-0 6.5Mbps	MCS-1 13Mbps	MCS-2 19.5Mbps	MCS-3 26Mbps	MCS-4 39Mbps	MCS-5 52Mbps	MCS-6 58.5Mbps	MCS-7 65Mbps
2450MHz	1	9.9	10.3	9.6	9.5	9.3	9.1	9.0	8.8
	6	9.9	9.8	10.3	9.3	9.3	9.1	8.9	8.7
	11	9.9	9.8	10.3	9.5	9.5	9.0	8.7	8.5

Table 24: Test results conducted power measurement 802.11n HT-20

7.2.2 Conducted power measurements WLAN 5 GHz

802.11a		maximum average conducted output power [dBm]							
Band	**channel**	**6Mbps**	**9Mbps**	**12Mbps**	**18Mbps**	**24Mbps**	**36Mbps**	**48Mbps**	**54Mbps**
5200MHz	36	10.6	10.7	10.7	10.3	10.6	10.0	9.9	9.7
	40	10.7	10.9	10.8	10.7	10.6	10.3	10.0	10.1
	44	**11.0**	10.9	10.8	10.5	10.5	10.1	10.1	9.7
	48	10.7	10.9	10.7	10.4	10.2	10.3	9.9	10.0
5300MHz	52	10.8	10.7	10.6	10.5	10.3	10.3	10.2	10.1
	56	10.6	11.0	10.6	10.4	10.7	10.2	9.9	10.0
	60	10.7	10.8	10.5	10.4	10.5	10.3	9.8	10.1
	64	**10.8**	10.7	10.6	10.5	10.2	9.8	9.7	10.1
5600MHz	100	**10.8**	10.6	10.6	10.2	10.2	10.0	9.7	9.6
	104	10.4	10.2	10.2	10.0	10.1	9.9	9.8	9.7
	108	10.4	10.3	10.3	9.9	10.0	9.8	9.7	9.3
	112	10.4	10.3	10.3	10.1	9.7	9.6	9.4	9.6
	116	10.2	9.9	9.8	9.8	10.0	9.7	9.3	9.3
	120	10.1	10.1	9.9	9.9	9.9	9.8	9.6	9.4
	124	10.3	10.7	10.1	10.5	10.0	9.8	9.7	9.5
	128	10.3	10.7	10.6	10.0	10.1	9.9	9.6	9.4
	132	10.4	10.3	10.3	10.1	10.3	10.0	9.7	9.8
	136	10.3	10.3	10.2	10.0	9.9	9.9	9.7	9.7
	140	10.6	10.5	10.4	10.6	10.0	10.0	9.4	9.7
5800MHz	149	**10.7**	10.6	10.5	10.3	10.1	10.2	9.8	9.7
	153	10.4	10.3	10.3	10.4	10.2	10.0	9.9	9.8
	157	10.7	10.4	10.4	10.3	10.1	9.9	9.8	9.7
	161	10.4	10.3	10.3	10.1	10.2	10.0	9.5	9.8
	165	10.2	10.7	10.1	9.9	10.0	9.8	9.7	9.4

Table 25: Test results conducted power measurement 802.11a

802.11n HT-20 / 802.11ac VHT-20		maximum average conducted output power [dBm]								
Band	channel	MCS-0 6.5Mbps	MCS-1 13Mbps	MCS-2 19.5Mbps	MCS-3 26Mbps	MCS-4 39Mbps	MCS-5 52Mbps	MCS-6 58.5Mbps	MCS-7 65Mbps	MCS-8 78Mbps
5200MHz	36	10.5	10.4	10.0	9.8	9.6	9.4	9.3	10.3	
	40	10.3	10.1	9.5	9.7	9.5	9.3	9.3	9.2	
	44	10.3	10.8	10.1	9.7	9.6	9.4	9.3	9.2	
	48	10.3	9.6	10.0	9.6	9.5	9.3	9.2	9.2	
5300MHz	52	10.4	10.3	10.2	9.8	9.9	9.7	9.6	9.2	
	56	10.4	10.3	10.0	10.1	9.9	9.6	9.6	9.3	
	60	10.5	10.1	10.0	9.9	9.7	9.3	9.3	9.4	
	64	10.4	10.2	10.1	9.6	9.4	9.2	9.4	9.1	
5600MHz	100	10.3	10.1	10.1	9.6	9.3	9.1	9.1	9.2	
	104	9.9	9.8	9.7	9.6	9.3	9.1	9.2	9.1	
	108	9.9	9.9	9.5	9.5	9.3	9.2	9.1	9.0	
	112	9.8	9.7	9.4	9.7	9.3	9.2	9.0	9.0	
	116	9.7	9.5	9.4	9.3	9.7	8.9	8.8	9.0	
	120	9.7	9.6	9.5	9.2	9.3	9.1	9.0	8.9	
	124	10.0	9.8	9.7	9.3	9.3	9.1	9.0	9.0	
	128	9.8	9.8	9.9	9.6	9.4	9.2	9.2	9.1	
	132	10.0	9.5	9.7	9.7	9.7	9.2	9.1	8.8	
	136	10.1	9.8	9.7	9.7	9.4	9.2	9.1	9.2	
	140	10.1	9.9	9.8	9.8	9.5	9.0	9.2	9.1	
5800MHz	149	10.0	9.7	9.9	9.6	9.3	9.2	9.3	9.0	
	153	10.2	9.8	9.9	9.6	9.5	9.2	9.0	9.1	
	157	10.0	9.8	9.8	9.6	9.4	9.2	9.1	9.0	
	161	10.7	10.0	9.7	9.6	9.4	9.4	9.1	9.1	
	165	10.0	10.1	9.7	9.5	9.2	9.1	9.0	9.1	

Table 26: Test results conducted power measurement 802.11n HT-20 / 802.11ac VHT-20

802.11n HT-40 / 802.11ac VHT-40		maximum average conducted output power [dBm]									
Band	channel	MCS-0 13.5Mbps	MCS-1 27Mbps	MCS-2 40.5Mbps	MCS-3 54Mbps	MCS-4 81Mbps	MCS-5 108Mbps	MCS-6 121.5Mbps	MCS-7 135Mbps	MCS-8 162Mbps	MCS-9 180Mbps
5200MHz	38	10.0	9.7	9.4	9.4	9.1	8.9	8.8	8.6	8.6	8.5
	46	10.3	10.1	9.6	9.3	9.0	8.8	8.7	8.6	8.6	8.5
5300MHz	54	10.3	10.0	9.8	9.1	9.3	8.5	8.4	8.4	9.0	8.5
	62	10.2	10.0	9.6	9.3	8.9	9.0	8.6	8.2	8.8	8.2
5600MHz	102	9.8	9.5	9.4	9.3	8.9	8.7	8.6	8.5	8.4	8.1
	118	9.8	9.3	9.0	9.2	8.8	8.4	9.1	8.2	8.2	8.2
	134	9.8	9.5	9.3	9.0	9.1	8.8	8.2	8.6	8.1	8.0
5800MHz	151	10.1	9.8	9.4	9.1	8.8	8.8	8.7	8.4	8.2	8.2
	159	9.6	9.4	9.2	9.1	8.8	8.6	8.5	8.5	8.1	8.2

Table 27: Test results conducted power measurement 802.11n HT-40 / 802.11ac VHT-40

802.11ac VHT-80		maximum average conducted output power [dBm]									
Band	channel	MCS-0 29.3Mbps	MCS-1 58.5Mbps	MCS-2 87.8Mbps	MCS-3 117Mbps	MCS-4 175.5Mbps	MCS-5 234Mbps	MCS-6 263.3Mbps	MCS-7 292.5Mbps	MCS-8 351Mbps	MCS-9 390Mbps
5200MHz	42	9.9	9.6	9.5	9.1	8.7	8.4	8.5	8.2	8.3	8.3
5300MHz	58	9.9	9.4	9.4	9.1	8.6	8.5	8.2	8.5	8.2	8.0
5600MHz	106	9.4	9.0	8.9	8.5	8.2	7.9	7.8	7.9	7.6	7.6
	122	9.3	8.9	8.6	8.3	8.0	7.8	7.7	7.7	7.5	7.5
5800MHz	155	9.7	9.2	8.8	8.7	8.3	8.1	8.0	8.1	7.8	7.8

Table 28: Test results conducted power measurement 802.11ac VHT-80

7.2.3 Standalone SAR Test Exclusion

Standalone SAR test exclusion considerations for **Body** position					
Communication system	freq. (MHz)	P_{avg}* (dBm)	P_{avg}* (mW)	**threshold$_{1-g}$ comparison value**	SAR test exclusion
GSM 850	835	25.2	331.1	60.5	no
GSM 1900	1900	22.7	186.2	51.3	no
UMTS FDD II	1900	24.5	281.8	77.7	no
UMTS FDD V	835	25.0	316.2	57.8	no
LTE FDD 17	710	24.0	251.2	42.3	no
WLAN 2450	2450	11.5	14.1	4.4	no
WLAN 5.2 GHz	5200	11.5	14.1	6.4	no
WLAN 5.3 GHz	5300	11.5	14.1	6.5	no
WLAN 5.6 GHz	5600	11.5	14.1	6.7	no
WLAN 5.8 GHz	5800	11.5	14.1	6.8	no
Bluetooth 2450	2450	9.7	9.3	2.9	yes

Table 29: Standalone SAR test exclusion considerations in **body position**

P_{avg}* - maximum possible output power declared by manufacturer

The **1-g SAR test exclusion thresholds** for 100 MHz to 6 GHz at *test separation distances* ≤ 50 mm are determined by:

[(*max. power of channel, including tune-up tolerance, mW*)/(*min. test separation distance, mm*)] · [√f(GHz)] ≤ **3.0** for 1-g SAR, where:

- f(GHz) is the RF channel transmit frequency in GHz
- Power and distance are rounded to the nearest mW and mm before calculation
- The result is rounded to one decimal place for comparison
- When the minimum test separation distance is < 5 mm, a distance of 5 mm is applied to determine SAR test exclusion

7.2.4 SAR measurement positions

SAR measurement positions						
mode	front	rear	left edge	right edge	top edge	bottom edge
GSM 850	no	yes	no	yes	yes	no
GSM 1900	no	yes	no	yes	yes	no
UMTS FDD II	no	yes	no	yes	yes	no
UMTS FDD V	no	yes	no	yes	yes	no
LTE FDD 17	no	yes	no	yes	yes	no
WLAN 2450	no	yes	no	no	yes	no
WLAN 5.2 GHz	no	yes	no	no	yes	no
WLAN 5.3 GHz	no	yes	no	no	yes	no
WLAN 5.6 GHz	no	yes	no	no	yes	no
WLAN 5.8 GHz	no	yes	no	no	yes	no

Note:
The distance of the antennas (see Annexe Photo documentation) to all adjacent edges SAR test exclusion for adjacent edges is possible according to KDB 447498 D01v05 chapter 4.3.1 2) or Appendix A/B.

Adjacent edge SAR test exclusion considerations						
Communication system	freq. (MHz)	P_{avg}* (dBm)	P_{avg}* (mW)	distance (mm)	**exclusion threshold$_{1g}$ (mW)**	SAR test exclusion
GSM 835	835	25.2	**331.1**	157.0	**515.4**	yes
GSM 1900	1880	22.7	**186.2**	157.0	**343.5**	yes
UMTS FDD II	1880	24.5	**281.8**	157.0	**343.5**	yes
UMTS FDD V	835	25.0	**316.2**	157.0	**515.4**	yes
LTE FDD 17	710	24.0	**251.2**	157.0	**559.0**	yes
WLAN 2450	2450	11.5	**14.1**	24.9	**47.6**	yes
WLAN 5.2 GHz	5200	11.5	**14.1**	24.9	**32.7**	yes
WLAN 5.3 GHz	5300	11.5	**14.1**	24.9	**32.4**	yes
WLAN 5.6 GHz	5600	11.5	**14.1**	24.9	**31.5**	yes
WLAN 5.8 GHz	5800	11.5	**14.1**	24.9	**31.0**	yes
Bluetooth 2450	2450	9.7	**9.3**	24.9	**47.6**	yes

Table 30: Adjacent edge SAR test exclusion considerations

7.3 SAR test results

7.3.1 Results overview

measured / extrapolated SAR numbers - body worn - GSM 850 MHz												
Ch.	Freq. (MHz)	time slots	dist. (mm)	modul.	power level	Position	cond. P_{max} (dBm)		SAR_{1g} results(W/kg)		SAR_{10g} (W/kg)	liquid (°C)
							declared**	measured	measured	extrapolated	measured	
190	836.6	2	17	GMSK	default	rear	31.2	30.7	0.358	0.402	0.241	21.7
190	836.6	2	15	GMSK	default	top edge	31.2	30.7	0.132	0.148	0.096	21.7
190	836.6	2	0	GMSK	default	right edge	31.2	30.7	0.473	0.531	0.313	21.7
128	824.2	1	0	GMSK	backoff	rear	28.9	28.7	**0.929**	**0.973**	**0.506**	21.7
190	836.6	1	0	GMSK	backoff	rear	28.9	28.4	0.772	0.866	0.422	21.7
251	848.8	1	0	GMSK	backoff	rear	28.9	28.4	0.637	0.715	0.348	21.7
190	836.6	1	0	GMSK	backoff	top edge	28.9	28.4	0.195	0.219	0.093	21.7
128	824.2	1	0	GMSK	backoff	rear	28.9	28.7	0.928	0.972	0.506	21.7

Table 31: Test results body worn SAR GSM 850 MHz (see max. SAR plot in Annex B.1: GSM 850MHz page 68)

* - repeated at the highest SAR measurement according to the FCC KDB 865664
** - maximum possible output power declared by manufacturer

measured / extrapolated SAR numbers - body worn - GSM 1900 MHz												
Ch.	Freq. (MHz)	time slots	dist. (mm)	modulation	power level	Position	cond. P_{max} (dBm)		SAR_{1g} results(W/kg)		SAR_{10g} (W/kg)	liquid (°C)
							declared**	measured	measured	extrapolated	measured	
661	1880.0	4	17	GMSK	default	rear	25.7	25.3	0.393	0.431	0.224	21.8
661	1880.0	4	15	GMSK	default	top edge	25.7	25.3	0.544	0.596	0.304	21.8
661	1880.0	4	0	GMSK	default	right edge	25.7	25.3	0.063	0.069	0.037	21.8
512	1850.2	2	0	GMSK	backoff	rear	19.3	18.4	0.672	0.827	0.301	21.8
661	1880.0	2	0	GMSK	backoff	rear	19.3	18.4	0.700	0.861	0.311	21.8
810	1909.8	2	0	GMSK	backoff	rear	19.3	18.3	**0.772**	**0.972**	**0.344**	21.8
661	1880.0	2	0	GMSK	backoff	top edge	19.3	18.4	0.552	0.679	0.246	21.8

Table 32: Test results body worn SAR GSM 1900 MHz (see max. SAR plot in Annex B.2: GSM 1900MHz page 69)

** - maximum possible output power declared by manufacturer

measured / extrapolated SAR numbers - body worn - UMTS FDD II 1880 MHz											
Ch.	Freq. (MHz)	test condition	dist. (mm)	power level	Position	cond. P_{max} (dBm)		SAR_{1g} results(W/kg)		SAR_{10g} (W/kg)	liquid (°C)
						declared**	measured	measured	extrapolated	measured	
9400	1880.0	RMC	17	default	rear	24.5	24.0	0.690	0.774	0.398	21.8
9262	1852.4	RMC	15	default	top edge	24.5	23.9	0.763	0.876	0.441	21.8
9400	1880.0	RMC	15	default	top edge	24.5	24.0	0.835	0.937	0.474	21.8
9538	1907.6	RMC	15	default	top edge	24.5	23.9	0.891	1.023	0.497	21.8
9400	1880.0	RMC	0	default	right edge	24.5	24.0	0.104	0.117	0.060	21.8
9400	1880.0	RMC	0	backoff	rear	12.4	12.2	0.641	0.671	0.285	21.8
9400	1880.0	RMC	0	backoff	top edge	12.4	12.2	0.493	0.516	0.221	21.8
9538	1907.6	RMC	15	default	top edge	24.5	23.9	**0.901**	**1.034**	**0.499**	21.8

Table 33: Test results body worn SAR UMTS FDD II 1880 MHz (see max. SAR plot in Annex B.3: UMTS FDD II page 70)

* - repeated at the highest SAR measurement according to the FCC KDB 865664
** - maximum possible output power declared by manufacturer

measured / extrapolated SAR numbers - body worn - UMTS FDD V 850 MHz											
Ch.	Freq. (MHz)	test condition	dist. (mm)	power level	Position	cond. P_{max} (dBm)		SAR_{1g} results(W/kg)		SAR_{10g} (W/kg)	liquid (°C)
						declared**	measured	measured	extrapolated	measured	
4182	836.4	RMC	17	default	rear	25.0	24.8	0.262	0.274	0.178	22.0
4182	836.4	RMC	15	default	top edge	25.0	24.8	0.130	0.136	0.095	22.0
4182	836.4	RMC	0	default	right edge	25.0	24.8	0.443	0.464	0.282	22.0
4132	826.4	RMC	0	backoff	rear	19.4	19.1	**0.649**	**0.695**	**0.356**	22.0
4182	836.4	RMC	0	backoff	rear	19.4	19.1	0.635	0.680	0.348	22.0
4233	846.6	RMC	0	backoff	rear	19.4	19.1	0.599	0.642	0.326	22.0
4182	836.4	RMC	0	backoff	top edge	19.4	19.1	0.180	0.193	0.089	22.0

Table 34: Test results body worn SAR UMTS FDD V 850 MHz (see max. SAR plot in Annex B.4: UMTS FDD V page 71)
** - maximum possible output power declared by manufacturer

measured / extrapolated SAR numbers - body worn - LTE FDD 17 700 MHz											
Ch.	Freq. (MHz)	RB offset	dist. (mm)	power level	Position	cond. P_{max} (dBm)		SAR_{1g} results(W/kg)		SAR_{10g} (W/kg)	liquid (°C)
						declared**	measured	measured	extrapolated	measured	
10MHz BW/1RB/QPSK											
23800	710	high	17	default	rear	24.0	23.5	0.105	0.118	0.074	21.3
23800	710	high	15	default	top edge	24.0	23.5	0.039	0.043	0.028	21.3
23800	710	high	0	default	right edge	24.0	23.5	0.113	0.127	0.068	21.3
23780	709	high	0	backoff	rear	18.7	18.5	0.727	0.761	0.378	21.3
23780	709	high	0	backoff	top edge	18.7	18.5	0.135	0.141	0.059	21.3
10MHz BW/25RB/QPSK											
23790	710	high	17	default	rear	23.0	22.5	0.084	0.094	0.060	21.3
23790	710	high	15	default	top edge	23.0	22.5	0.032	0.036	0.023	21.3
23790	710	high	0	default	right edge	23.0	22.5	0.092	0.103	0.055	21.3
23780	709	low	0	backoff	rear	18.7	18.4	0.727	0.779	0.377	21.3
23790	710	high	0	backoff	rear	18.7	18.4	0.729	0.781	0.378	21.3
23800	711	low	0	backoff	rear	18.7	18.4	**0.739**	**0.792**	**0.383**	21.3
23790	710	high	0	backoff	top edge	18.7	18.4	0.134	0.144	0.059	21.3

Table 35: Test results body worn SAR LTE FDD 17 700 MHz (see max. SAR plot in Annex B.5: LTE FDD 17 page 72)
** - maximum possible output power declared by manufacturer

measured / extrapolated SAR numbers - body worn - WLAN 2450 MHz										
Ch.	Freq. (MHz)	Test condition	dist. (mm)	Position	cond. P_{max} (dBm)		SAR_{1g} results(W/kg)		SAR_{10g} (W/kg)	liquid (°C)
					declared**	measured	measured	extrapolated	measured	
6	2437	1Mbit/s	17	rear	11.5	10.4	0.019	0.024	0.010	21.6
6	2437	1Mbit/s	15	top edge	11.5	10.4	0.013	0.017	0.007	21.6
1	2412	1Mbit/s	0	rear	11.5	10.6	0.502	0.618	0.176	21.6
6	2437	1Mbit/s	0	rear	11.5	10.4	**0.520**	**0.670**	**0.181**	21.6
11	2462	1Mbit/s	0	rear	11.5	10.1	0.404	0.558	0.152	21.6
1	2412	1Mbit/s	0	top edge	11.5	10.6	0.170	0.209	0.070	21.6

Table 36: Test results body worn SAR WLAN 2450 MHz (see max. SAR plot in Annex B.6: WLAN 2450MHz page 73)
** - maximum possible output power declared by manufacturer

measured / extrapolated SAR numbers - Body worn - WLAN 5 GHz										
Ch.	Freq. (MHz)	Test conditio	distance (mm)	Position	cond. P_{max} (dBm)		$_{1g}$ results(W/kg)		SAR_{10g} (W/kg)	liquid (°C)
					declared**	measured	measured	extrapolated	measured	
44	5220	6Mbit/s	0	rear	11.5	11.0	0.572	0.642	0.160	21.6
64	5320	6Mbit/s	0	rear	11.5	10.8	0.337	0.396	0.090	21.6
100	5500	6Mbit/s	0	rear	11.5	10.8	0.433	0.509	0.081	21.6
149	5745	6Mbit/s	0	rear	11.5	10.7	0.460	0.553	0.081	21.6
44	5220	6Mbit/s	17	rear	11.5	11.0	0.014	0.016	0.003	21.6
44	5220	6Mbit/s	0	top edge	11.5	11.0	0.337	0.378	0.090	21.6
64	5320	6Mbit/s	0	top edge	11.5	10.8	0.359	0.422	0.088	21.6
100	5500	6Mbit/s	0	top edge	11.5	10.8	**0.608**	**0.714**	0.139	21.6
149	5745	6Mbit/s	0	top edge	11.5	10.7	0.276	0.332	0.063	21.6
100	5500	6Mbit/s	15	top edge	11.5	10.8	0.033	0.039	0.008	21.6

Table 37: Test results body worn SAR WLAN 5 GHz (see max. SAR plot in Annex B.7: WLAN 5GHz page 74)
** - maximum possible output power declared by manufacturer

Estimated stand alone SAR.					
Communication system	freq. (GHz)	distance (mm)	P_{avg} (dBm)	P_{avg} (mW)	estimated$_{1-g}$ (W/kg)
Bluetooth 2450	2.45	5	9.7	9.3	0.390
Bluetooth 2450	2.45	15	9.7	9.3	0.130
Bluetooth 2450	2.45	17	9.7	9.3	0.115

Table 28: Estimated stand alone SAR_{max} for Bluetooth 2450MHz body worn

7.3.2 General description of test procedures

- The DUT is tested using CMU 200 and CMW 500 communications testers as controller unit to set test channels and maximum output power to the DUT, as well as for measuring the conducted peak power.
- Test positions as described in the tables above are in accordance with the specified test standard.
- Tests in body position were performed in that configuration, which generates the highest time based averaged output power (see conducted power results).
- UMTS was tested in RMC mode with 12.2 kbit/s and TPC bits set to 'all 1'.
- WLAN was tested in 802.11a/b mode with 1 MBit/s and 6 MBit/s. According to KDB 248227 the SAR testing for 802.11g/n/ac is not required since the maximum power of 802.11g/n/ac is less ¼ dB higher than maximum power of 802.11a/b.
- Required WLAN test channels were selected according to KDB 248227
- The device was tested in different scenarios that depended on the activation of a power back off triggered by the proximity sensor.
  - Scenario1: Rear position with 17mm distance without power reduction
  - Scenario2: Top position with 15mm distance without power reduction
  - Scenario3: Rear position with 0mm distance with power reduction
  - Scenario4: Top position with 0mm distance with power reduction
  - Scenario5: Right side position with 0mm distance without power reduction
- According to IEEE 1528 the SAR test shall be performed at middle channel. Testing of top and bottom channel is optional.
- According to KDB 447498 D01 testing of other required channels within the operating mode of a frequency band is not required when the reported 1-g or 10-g SAR for the mid-band or highest output power channel is:
  - ≤ 0.8 W/kg or 2.0 W/kg, for 1-g or 10-g respectively, when the transmission band is ≤ 100 MHz
  - ≤ 0.6 W/kg or 1.5 W/kg, for 1-g or 10-g respectively, when the transmission band is between 100 MHz and 200 MHz
  - ≤ 0.4 W/kg or 1.0 W/kg, for 1-g or 10-g respectively, when the transmission band is ≥ 200 MHz
- IEEE 1528-2003 requires the middle channel to be tested first. This generally applies to wireless devices that are designed to operate in technologies with tight tolerances for maximum output power variations across channels in the band. When the maximum output power variation across the required test channels is > ½ dB, instead of the middle channel, the highest output power channel must be used.

7.3.3 Multiple Transmitter Information

The following tables list information which is relevant for the decision if a simultaneous transmit evaluation is necessary according to FCC KDB 447498D01 General RF Exposure Guidance v05.

reported SAR **WWAN** and **WLAN 2.4GHz**, **ΣSAR** evaluation, **SPLSRi**						
Frequency band	Position	SARmax /W/kg		**ΣSAR**	distance	**ratio**
		WWAN	WLAN	<1.6W/kg	**Ri**, mm	≤ 0.040
GSM 850	rear 17mm	0.402	0.024	0.426		
GSM 850	top edge 15mm	0.148	0.017	0.165		
GSM 850	rear 0mm	0.973	0.670	**1.643**	154.6	0.014
GSM 850	top edge 0mm	0.219	0.209	0.428		
GSM 1900	rear 17mm	0.431	0.024	0.455		
GSM 1900	top edge 15mm	0.596	0.017	0.613		
GSM 1900	rear 0mm	0.972	0.670	**1.642**	147.0	0.014
GSM 1900	top edge 0mm	0.679	0.209	0.888		
UMTS FDD II	rear 17mm	0.774	0.024	0.798		
UMTS FDD II	top edge 15mm	1.034	0.017	1.051		
UMTS FDD II	rear 0mm	0.671	0.670	1.341		
UMTS FDD II	top edge 0mm	0.516	0.209	0.725		
UMTS FDD V	rear 17mm	0.274	0.024	0.298		
UMTS FDD V	top edge 15mm	0.136	0.017	0.153		
UMTS FDD V	rear 0mm	0.695	0.670	1.365		
UMTS FDD V	top edge 0mm	0.193	0.209	0.402		
LTE FDD 17	rear 17mm	0.118	0.024	0.142		
LTE FDD 17	top edge 15mm	0.043	0.017	0.060		
LTE FDD 17	rear 0mm	0.792	0.670	1.462		
LTE FDD 17	top edge 0mm	0.144	0.209	0.353		

Table 38: SAR_{max} WWAN and **WLAN 2.4GHz**, ΣSAR evaluation, **$SPLSR_i$**

reported SAR **WWAN** and **WLAN 5GHz**, **ΣSAR** evaluation, **SPLSRi**						
Frequency band	Position	SARmax /W/kg		**ΣSAR**	distance	**ratio**
		WWAN	WLAN	<1.6W/kg	**Ri**, mm	≤ 0.040
GSM 850	rear 17mm	0.402	0.016	0.418		
GSM 850	top edge 15mm	0.148	0.039	0.187		
GSM 850	rear 0mm	0.973	0.696	**1.669**	147.7	0.015
GSM 850	top edge 0mm	0.219	0.714	0.933		
GSM 1900	rear 17mm	0.431	0.016	0.447		
GSM 1900	top edge 15mm	0.596	0.039	0.635		
GSM 1900	rear 0mm	0.972	0.696	**1.668**	140.3	0.015
GSM 1900	top edge 0mm	0.679	0.714	1.393		
UMTS FDD II	rear 17mm	0.774	0.016	0.790		
UMTS FDD II	top edge 15mm	1.034	0.039	1.073		
UMTS FDD II	rear 0mm	0.671	0.642	1.313		
UMTS FDD II	top edge 0mm	0.516	0.714	1.230		
UMTS FDD V	rear 17mm	0.274	0.016	0.290		
UMTS FDD V	top edge 15mm	0.136	0.039	0.175		
UMTS FDD V	rear 0mm	0.695	0.696	1.391		
UMTS FDD V	top edge 0mm	0.193	0.714	0.907		
LTE FDD 17	rear 17mm	0.118	0.016	0.134		
LTE FDD 17	top edge 15mm	0.043	0.039	0.082		
LTE FDD 17	rear 0mm	0.792	0.696	1.488		
LTE FDD 17	top edge 0mm	0.144	0.714	0.858		

Table 39: SAR_{max} WWAN and **WLAN 5GHz**, ΣSAR evaluation, **$SPLSR_i$**

reported SAR **WWAN** and **Bluetooth 2.4GHz**, **ΣSAR** evaluation, **SPLSRi**						
Frequency band	Position	SARmax /W/kg		**ΣSAR**	distance	**ratio**
		WWAN	Bluetooth	<1.6W/kg	**Ri**, mm	≤ 0.040
GSM 850	rear 17mm	0.402	0.115	0.517		
GSM 850	top edge 15mm	0.148	0.130	0.278		
GSM 850	rear 0mm	0.973	0.390	**1.363**		
GSM 850	top edge 0mm	0.219	0.390	0.609		
GSM 1900	rear 17mm	0.431	0.115	0.546		
GSM 1900	top edge 15mm	0.596	0.130	0.726		
GSM 1900	rear 0mm	0.972	0.390	1.362		
GSM 1900	top edge 0mm	0.679	0.390	1.069		
UMTS FDD II	rear 17mm	0.774	0.115	0.889		
UMTS FDD II	top edge 15mm	1.034	0.130	1.164		
UMTS FDD II	rear 0mm	0.671	0.390	1.061		
UMTS FDD II	top edge 0mm	0.516	0.390	0.906		
UMTS FDD V	rear 17mm	0.274	0.115	0.389		
UMTS FDD V	top edge 15mm	0.136	0.130	0.266		
UMTS FDD V	rear 0mm	0.695	0.390	1.085		
UMTS FDD V	top edge 0mm	0.193	0.390	0.583		
LTE FDD 17	rear 17mm	0.118	0.115	0.233		
LTE FDD 17	top edge 15mm	0.043	0.130	0.173		
LTE FDD 17	rear 0mm	0.792	0.390	1.182		
LTE FDD 17	top edge 0mm	0.144	0.390	0.534		

Table 40: SAR_{max} WWAN and **Bluetooth 2450MHz**, ΣSAR evaluation

reported SAR **WWAN** and **WLAN 5GHz**, **ΣSAR** evaluation, **SPLSRi**							
Frequency band	Position	SARmax /W/kg			**ΣSAR**	distance	**ratio**
		WWAN	WLAN	BT	<1.6W/kg	**Ri**, mm	≤ 0.040
GSM 850	rear 17mm	0.402	0.016	0.115	0.533		
GSM 850	top edge 15mm	0.148	0.039	0.130	0.317		
GSM 850	rear 0mm	0.973	0.696	0.390	**2.059**	125.0	0.024
GSM 850	top edge 0mm	0.219	0.714	0.390	1.323		
GSM 1900	rear 17mm	0.431	0.016	0.115	0.562		
GSM 1900	top edge 15mm	0.596	0.039	0.130	0.765		
GSM 1900	rear 0mm	0.972	0.696	0.390	**2.058**	125.0	0.024
GSM 1900	top edge 0mm	0.679	0.714	0.390	**1.783**	125.0	0.019
UMTS FDD II	rear 17mm	0.774	0.016	0.115	0.905		
UMTS FDD II	top edge 15mm	1.034	0.039	0.130	1.203		
UMTS FDD II	rear 0mm	0.671	0.642	0.390	**1.703**	125.0	0.018
UMTS FDD II	top edge 0mm	0.516	0.714	0.390	**1.620**	125.0	0.016
UMTS FDD V	rear 17mm	0.274	0.016	0.115	0.405		
UMTS FDD V	top edge 15mm	0.136	0.039	0.130	0.305		
UMTS FDD V	rear 0mm	0.695	0.696	0.390	**1.781**	125.0	0.019
UMTS FDD V	top edge 0mm	0.193	0.714	0.390	1.297		
LTE FDD 17	rear 17mm	0.118	0.016	0.115	0.249		
LTE FDD 17	top edge 15mm	0.043	0.039	0.130	0.212		
LTE FDD 17	rear 0mm	0.792	0.696	0.390	**1.878**	125.0	0.021
LTE FDD 17	top edge 0mm	0.144	0.714	0.390	1.248		

Table 41: SAR_{max} **WWAN, WLAN 5GHz** and **Bluetooth 2450MHz**, ΣSAR evaluation
Minimum antenna separation distance between MAIN antenna and WLAN / Bluetooth antenna – **125 mm**

Conclusion:

ΣSAR > 1.6 W/kg, but SAR-to-(peak-locations spacing) **ratio** (**SPLSR$_i$**) is less than **0.04** therefore simultaneous transmissions SAR measurement with the enlarged zoom scan measurement and volume scan post-processing procedures is **not** required.

7.3.4 SAR peak location separation

GSM850 + WLAN2450 rear

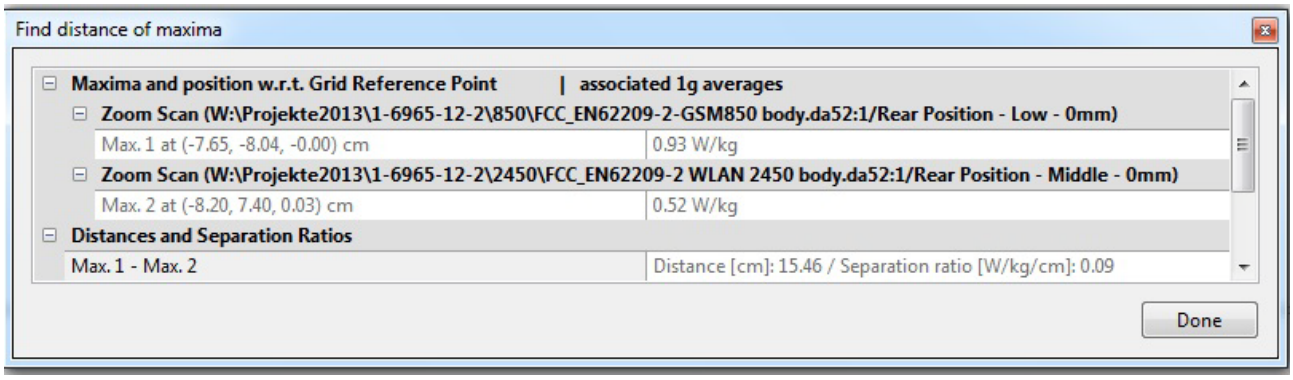

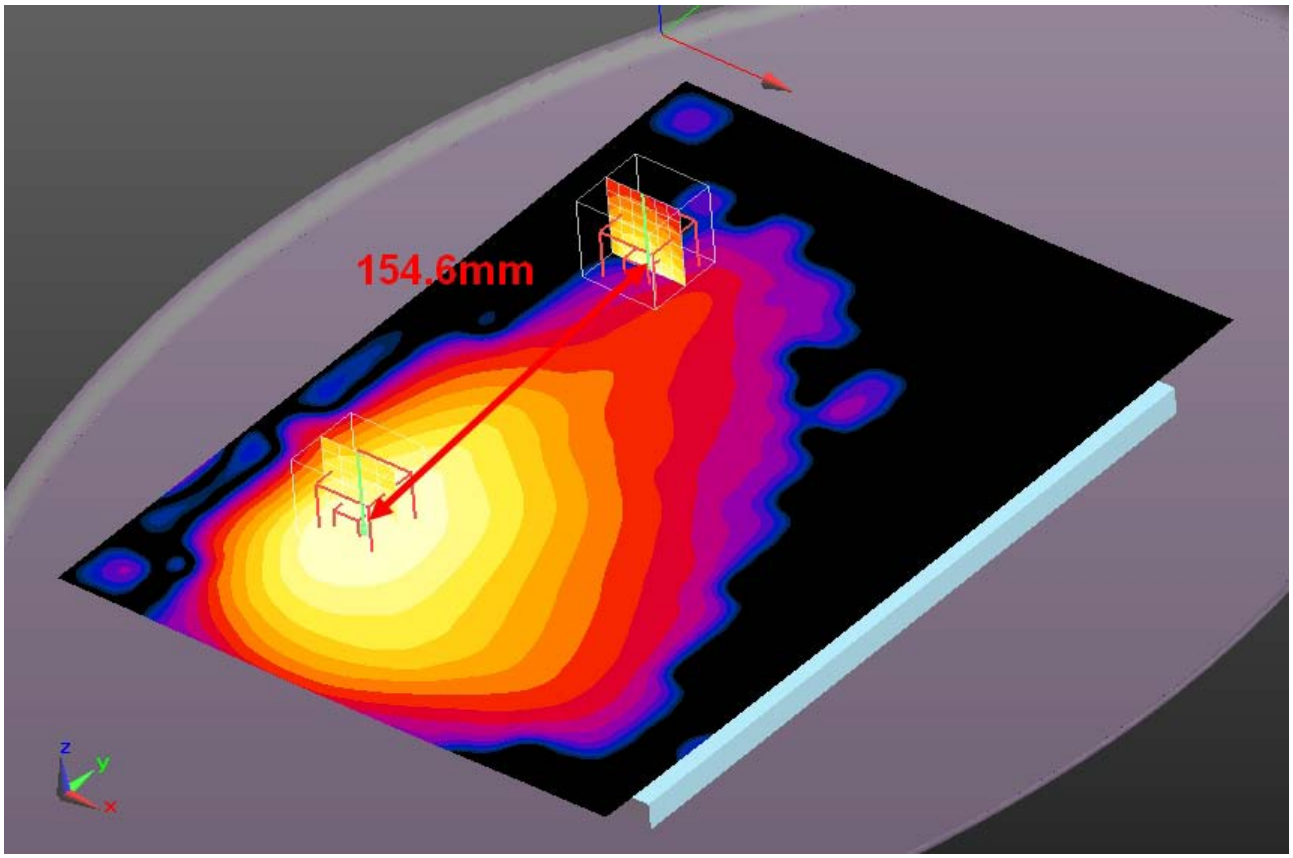

GSM1900 + WLAN2450 rear

Find distance of maxima

Maxima and position w.r.t. Grid Reference Point	**associated 1g averages**
Zoom Scan (W:\Projekte2013\1-6965-12-2\1900\FCC_EN62209-2-GSM1900 body.da52:1/Rear Position - High - 0mm)	
Max. 1 at (-8.40, -7.30, 0.05) cm	0.77 W/kg
Zoom Scan (W:\Projekte2013\1-6965-12-2\2450\FCC_EN62209-2 WLAN 2450 body.da52:1/Rear Position - Middle - 0mm)	
Max. 2 at (-8.20, 7.40, 0.03) cm	0.52 W/kg
Distances and Separation Ratios	
Max. 1 - Max. 2	Distance [cm]: 14.70 / Separation ratio [W/kg/cm]: 0.09

Done

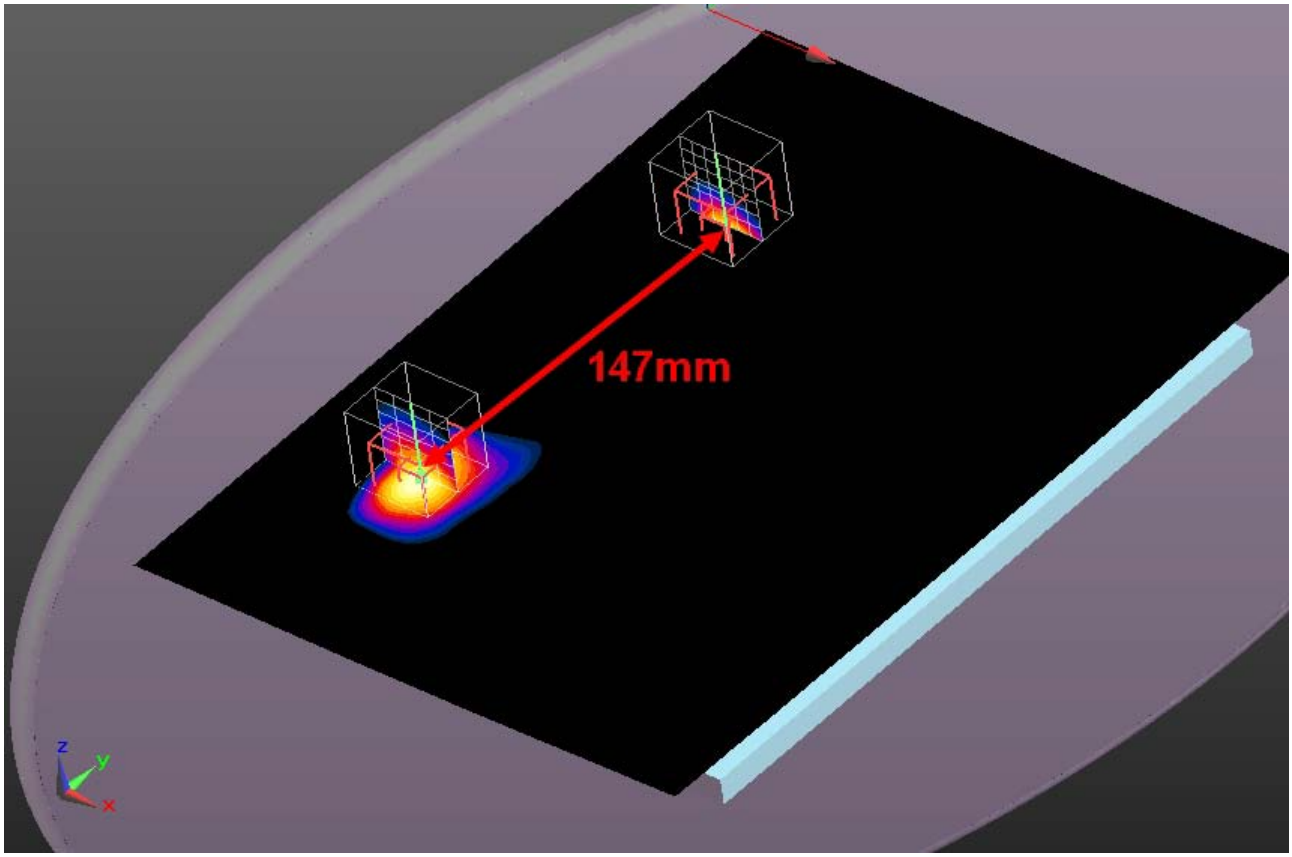

GSM850 + WLAN5GHz rear

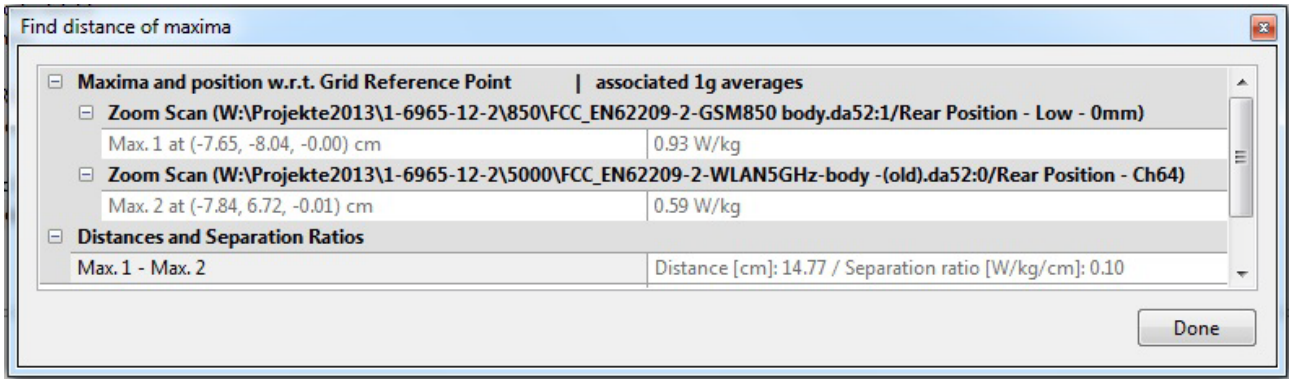

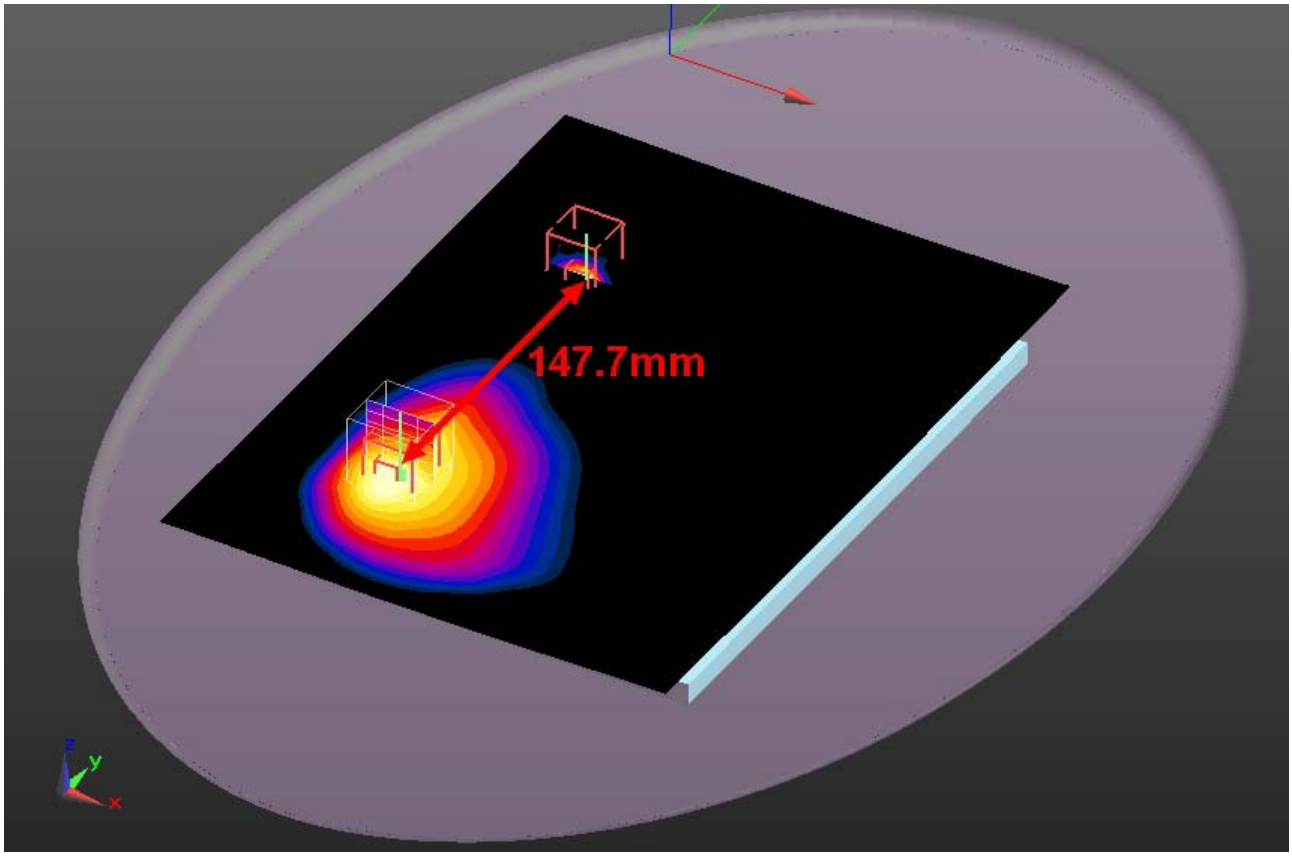

GSM1900 + WLAN5GHz rear

Find distance of maxima

Maxima and position w.r.t. Grid Reference Point	**associated 1g averages**
Zoom Scan (W:\Projekte2013\1-6965-12-2\1900\FCC_EN62209-2-GSM1900 body.da52:1/Rear Position - High - 0mm)	
Max. 1 at (-8.40, -7.30, 0.05) cm	0.77 W/kg
Zoom Scan (W:\Projekte2013\1-6965-12-2\5000\FCC_EN62209-2-WLAN5GHz-body -(old).da52:0/Rear Position - Ch64)	
Max. 2 at (-7.84, 6.72, -0.01) cm	0.59 W/kg
Distances and Separation Ratios	
Max. 1 - Max. 2	Distance [cm]: 14.03 / Separation ratio [W/kg/cm]: 0.10

Done

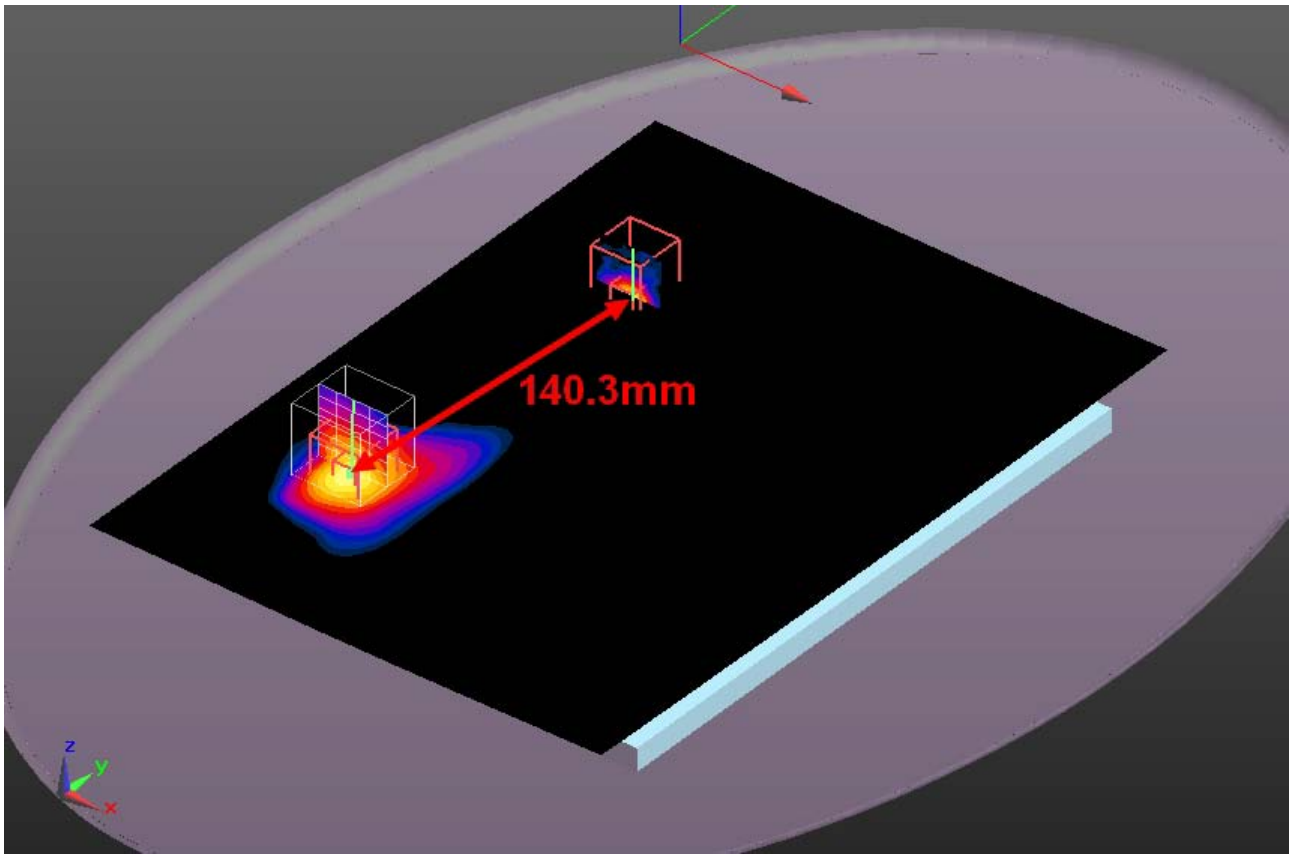

8 Test equipment and ancillaries used for tests

To simplify the identification of the test equipment and/or ancillaries which were used, the reporting of the relevant test cases only refer to the test item number as specified in the table below.

Equipment	Type	Manufacturer	Serial No.	Last Calibration	Frequency (months)
Dosimetric E-Field Probe	ES3DV3	Schmid & Partner Engineering AG	3320	June 04, 2013	12
Dosimetric E-Field Probe	EX3DV4	Schmid & Partner Engineering AG	3944	August 02, 2013	12
750 MHz System Validation Dipole	D750V3	Schmid & Partner Engineering AG	1041	August 15, 2013	24
835 MHz System Validation Dipole	D835V2	Schmid & Partner Engineering AG	4d153	June 06, 2013	24
1900 MHz System Validation Dipole	D1900V2	Schmid & Partner Engineering AG	5d009	May 15, 2013	24
2450 MHz System Validation Dipole	D2450V2	Schmid & Partner Engineering AG	710	August 13, 2012	24
5 GHz System Validation Dipole	D5GHzV 2	Schmid & Partner Engineering AG	1055	August 19, 2013	24
Data acquisition electronics	DAE3V1	Schmid & Partner Engineering AG	413	January 16, 2014	12
Software	DASY52 52.8.7	Schmid & Partner Engineering AG	---	N/A	--
Phantom ELI 4.0	QDOVA0 01BA	Schmid & Partner Engineering AG	1046	N/A	--
Universal Radio Communication Tester	CMU 200	Rohde & Schwarz	106826	January 27, 2014	24
Universal Radio Communication Tester	CMW500	Rohde & Schwarz	102375	January 16, 2013	24
Network Analyser 300 kHz to 6 GHz	8753ES	Hewlett Packard)*	US39174436	February 24, 2012	24
Dielectric Probe Kit	85070C	Hewlett Packard	US99360146	N/A	12
Signal Generator	8671B	Hewlett Packard	2823A00656	January 15, 2013	24
Amplifier	25S1G4 (25 Watt)	Amplifier Reasearch	20452	N/A	--
Power Meter	NRP	Rohde & Schwarz	101367	January 21, 2014	24
Power Meter Sensor	NRP Z22	Rohde & Schwarz	100227	January 21, 2014	12
Power Meter Sensor	NRP Z22	Rohde & Schwarz	100234	January 21, 2014	12
Directional Coupler	778D	Hewlett Packard	19171	January 21, 2014	12

)* : Network analyzer probe calibration against air, distilled water and a shorting block performed before measuring liquid parameters.

9 Observations

No observations exceeding those reported with the single test cases have been made.

Annex A: System performance check

Date/Time: 21.02.2014 14:30:39

SystemPerformanceCheck-D750 body 2014-02-21

DUT: Dipole 750 MHz; Type: D750V3; Serial: 1041
Communication System: UID 0, CW (0); Communication System Band: D750 (750.0 MHz); Frequency: 750 MHz; Communication System PAR: 0 dB; PMF: 1
Medium parameters used: f = 750 MHz; σ = 0.974 S/m; ε_r = 54.515; ρ = 1000 kg/m^3
Phantom section: Flat Section
Measurement Standard: DASY5
DASY5 Configuration:
- Probe: ES3DV3 - SN3320; ConvF(6.36, 6.36, 6.36); Calibrated: 04.06.2013;
- Sensor-Surface: 4mm (Mechanical Surface Detection), z = 2.0, 32.0
- Electronics: DAE3 Sn413; Calibrated: 16.01.2014
- Phantom: ELI 4.0; Type: QDOVA001BA; Serial: 1046
- DASY52 52.8.7(1137); SEMCAD X 14.6.10(7164)

MSL750/d=15mm, Pin=1000 mW, dist=4.0mm/Area Scan (51x51x1):

Interpolated grid: dx=1.500 mm, dy=1.500 mm
Maximum value of SAR (interpolated) = 8.77 W/kg

MSL750/d=15mm, Pin=1000 mW, dist=4.0mm/Zoom Scan (7x8x7)/Cube 0:

Measurement grid: dx=5mm, dy=5mm, dz=5mm
Reference Value = 98.042 V/m; Power Drift = -0.11 dB
Peak SAR (extrapolated) = 12.2 W/kg
SAR(1 g) = 8.25 W/kg; SAR(10 g) = 5.47 W/kg
Maximum value of SAR (measured) = 8.87 W/kg

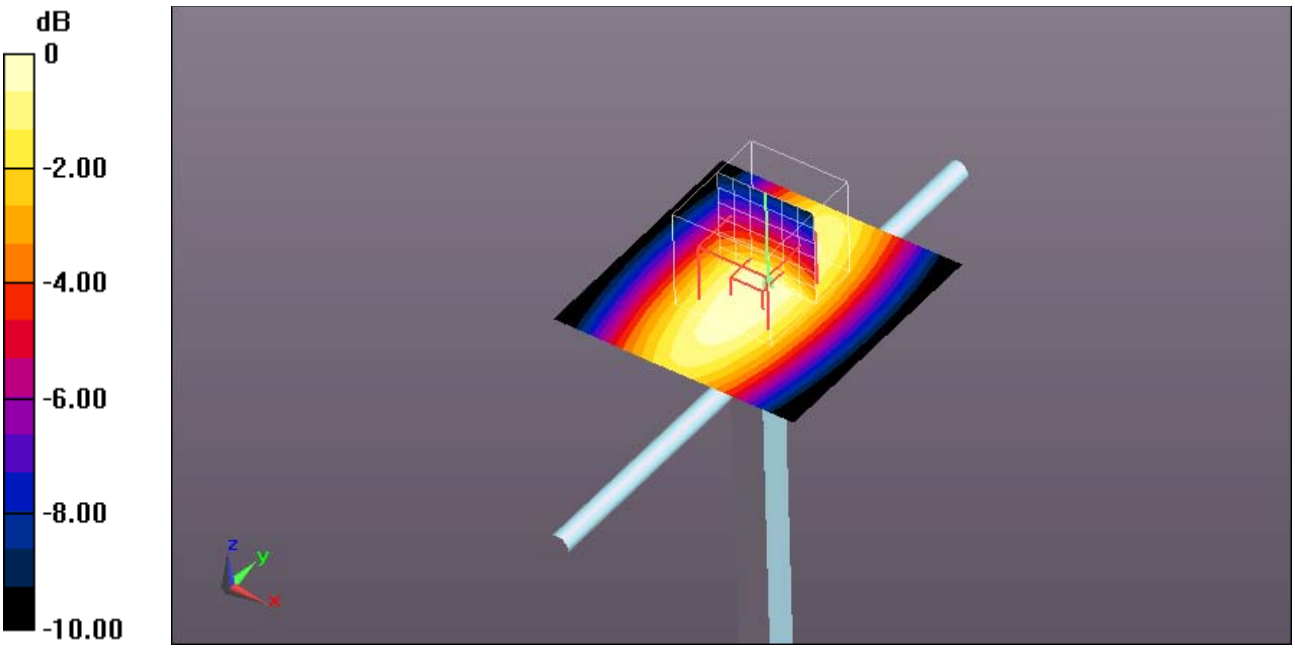

0 dB = 8.87 W/kg = 9.48 dBW/kg

Additional information:
ambient temperature: 21.8°C; liquid temperature: 21.3°C

Date/Time: 19.02.2014 17:34:52

SystemPerformanceCheck-D835 body 2014-02-19

DUT: Dipole 835 MHz; Type: D835V2; Serial: 4d153

Communication System: UID 0, CW (0); Communication System Band: D835 (835.0 MHz); Frequency: 835 MHz; Communication System PAR: 0 dB; PMF: 1

Medium parameters used: f = 835 MHz; σ = 1.006 S/m; ε_r = 55.582; ρ = 1000 kg/m^3

Phantom section: Flat Section

Measurement Standard: DASY5

DASY5 Configuration:

- Probe: ES3DV3 - SN3320; ConvF(6.29, 6.29, 6.29); Calibrated: 04.06.2013;
- Sensor-Surface: 4mm (Mechanical Surface Detection), z = 2.0, 32.0
- Electronics: DAE3 Sn413; Calibrated: 16.01.2014
- Phantom: ELI 4.0; Type: QDOVA001BA; Serial: 1046
- DASY52 52.8.7(1137); SEMCAD X 14.6.10(7164)

MSL835/d=15mm, Pin=1000 mW, dist=4.0mm/Area Scan (51x51x1):

Interpolated grid: dx=1.500 mm, dy=1.500 mm

Maximum value of SAR (interpolated) = 10.5 W/kg

MSL835/d=15mm, Pin=1000 mW, dist=4.0mm/Zoom Scan (7x7x7)/Cube 0:

Measurement grid: dx=5mm, dy=5mm, dz=5mm

Reference Value = 104.3 V/m; Power Drift = -0.01 dB

Peak SAR (extrapolated) = 14.6 W/kg

SAR(1 g) = 9.93 W/kg; SAR(10 g) = 6.57 W/kg

Maximum value of SAR (measured) = 10.6 W/kg

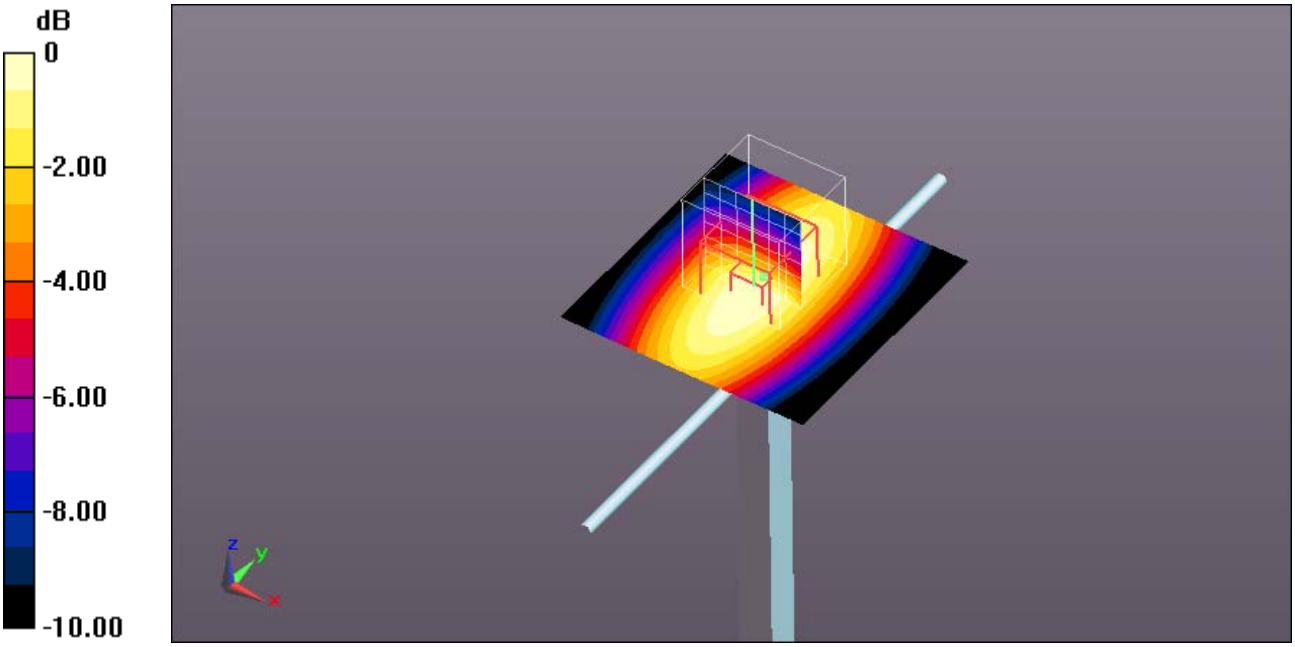

0 dB = 10.6 W/kg = 10.25 dBW/kg

Additional information:

ambient temperature: 22.0°C; liquid temperature: 21.7°C

Date/Time: 20.02.2014 11:49:31

SystemPerformanceCheck-D835 body 2014-02-20

DUT: Dipole 835 MHz; Type: D835V2; Serial: 4d153

Communication System: UID 0, CW (0); Communication System Band: D835 (835.0 MHz); Frequency: 835 MHz; Communication System PAR: 0 dB; PMF: 1

Medium parameters used: f = 835 MHz; σ = 1.006 S/m; ε_r = 55.582; ρ = 1000 kg/m^3

Phantom section: Flat Section

Measurement Standard: DASY5

DASY5 Configuration:

- Probe: ES3DV3 - SN3320; ConvF(6.29, 6.29, 6.29); Calibrated: 04.06.2013;
- Sensor-Surface: 4mm (Mechanical Surface Detection), z = 2.0, 32.0
- Electronics: DAE3 Sn413; Calibrated: 16.01.2014
- Phantom: ELI 4.0; Type: QDOVA001BA; Serial: 1046
- DASY52 52.8.7(1137); SEMCAD X 14.6.10(7164)

MSL835/d=15mm, Pin=1000 mW, dist=4.0mm/Area Scan (51x51x1):

Interpolated grid: dx=1.500 mm, dy=1.500 mm

Maximum value of SAR (interpolated) = 10.3 W/kg

MSL835/d=15mm, Pin=1000 mW, dist=4.0mm/Zoom Scan (7x7x7)/Cube 0:

Measurement grid: dx=5mm, dy=5mm, dz=5mm

Reference Value = 103.0 V/m; Power Drift = 0.01 dB

Peak SAR (extrapolated) = 14.2 W/kg

SAR(1 g) = 9.67 W/kg; SAR(10 g) = 6.4 W/kg

Maximum value of SAR (measured) = 10.4 W/kg

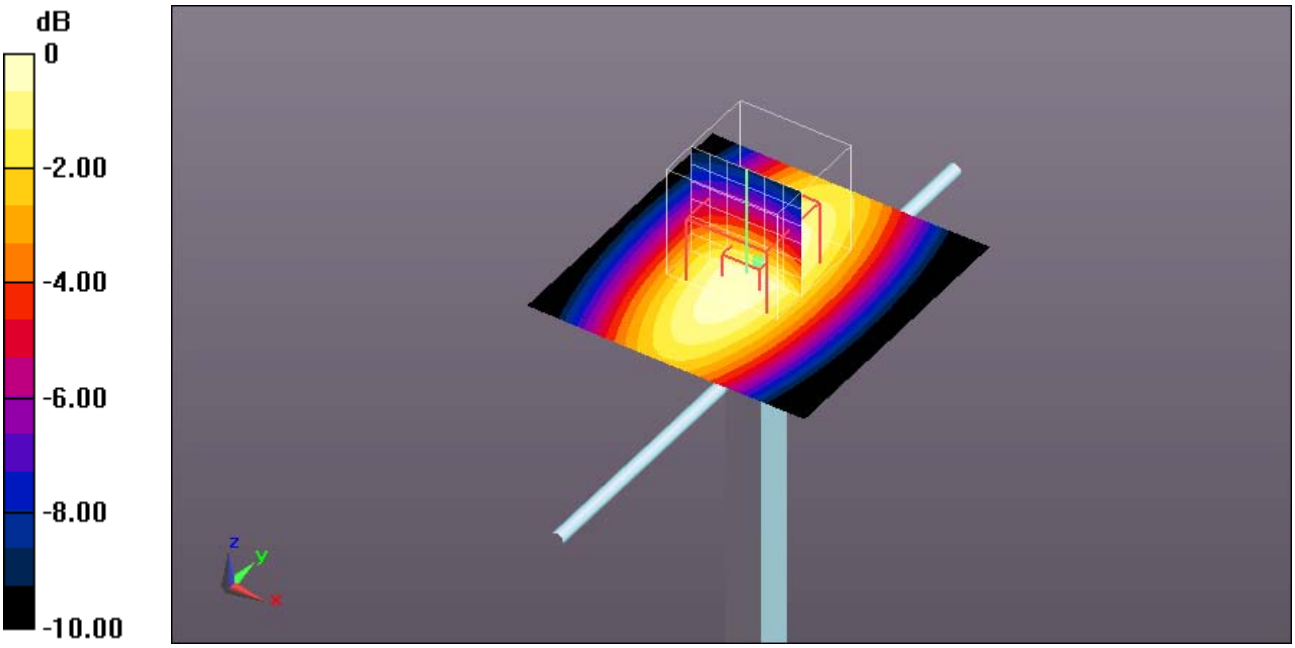

0 dB = 10.4 W/kg = 10.17 dBW/kg

Additional information:

ambient temperature: 22.4°C; liquid temperature: 22.0°C

Date/Time: 20.02.2014 12:32:47

SystemPerformanceCheck-D1900 body 2014-02-20

DUT: Dipole 1900 MHz; Type: D1900V2; Serial: 5d009
Communication System: UID 0, CW (0); Communication System Band: D1900 (1900.0 MHz); Frequency: 1900 MHz; Communication System PAR: 0 dB; PMF: 1
Medium parameters used: f = 1900 MHz; σ = 1.535 S/m; ε_r = 52.794; ρ = 1000 kg/m^3
Phantom section: Flat Section
Measurement Standard: DASY5
DASY5 Configuration:
- Probe: ES3DV3 - SN3320; ConvF(4.78, 4.78, 4.78); Calibrated: 04.06.2013;
- Sensor-Surface: 4mm (Mechanical Surface Detection), z = 2.0, 32.0
- Electronics: DAE3 Sn413; Calibrated: 16.01.2014
- Phantom: ELI 4.0; Type: QDOVA001BA; Serial: 1046
- DASY52 52.8.7(1137); SEMCAD X 14.6.10(7164)

MSL1900/d=10mm, Pin=1000 mW, dist=4.0mm/Area Scan (51x51x1):

Interpolated grid: dx=1.500 mm, dy=1.500 mm
Maximum value of SAR (interpolated) = 56.2 W/kg

MSL1900/d=10mm, Pin=1000 mW, dist=4.0mm/Zoom Scan (7x7x7)/Cube 0:

Measurement grid: dx=5mm, dy=5mm, dz=5mm
Reference Value = 173.9 V/m; Power Drift = -0.05 dB
Peak SAR (extrapolated) = 70.1 W/kg
SAR(1 g) = 39.1 W/kg; SAR(10 g) = 20.6 W/kg
Maximum value of SAR (measured) = 43.9 W/kg

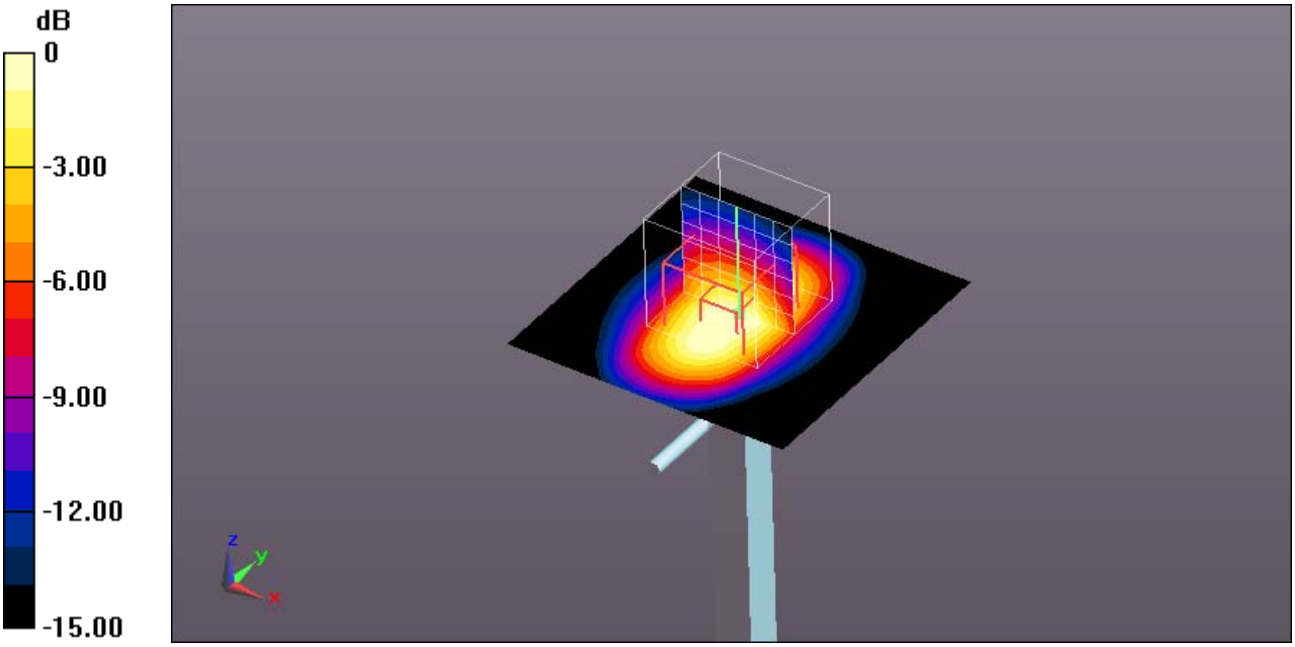

0 dB = 43.9 W/kg = 16.42 dBW/kg

Additional information:
ambient temperature: 22.5°C; liquid temperature: 21.8°C

Date/Time: 24.02.2014 10:08:45

SystemPerformanceCheck-D2450 body 2014-02-24

DUT: Dipole 2450 MHz; Type: D2450V2; Serial: 710

Communication System: UID 0, CW (0); Communication System Band: D2450 (2450.0 MHz); Frequency: 2450 MHz; Communication System PAR: 0 dB; PMF: 1
Medium parameters used: f = 2450 MHz; σ = 1.962 S/m; ε_r = 51.546; ρ = 1000 kg/m^3
Phantom section: Flat Section
Measurement Standard: DASY5
DASY5 Configuration:
- Probe: ES3DV3 - SN3320; ConvF(4.36, 4.36, 4.36); Calibrated: 04.06.2013;
- Sensor-Surface: 4mm (Mechanical Surface Detection), z = 2.0, 32.0
- Electronics: DAE3 Sn413; Calibrated: 16.01.2014
- Phantom: ELI 4.0; Type: QDOVA001BA; Serial: 1046
- DASY52 52.8.7(1137); SEMCAD X 14.6.10(7164)

MSL2450/d=10mm, Pin=1000 mW, dist=4.0mm/Area Scan (81x81x1):

Interpolated grid: dx=1.000 mm, dy=1.000 mm
Maximum value of SAR (interpolated) = 60.2 W/kg

MSL2450/d=10mm, Pin=1000 mW, dist=4.0mm/Zoom Scan (7x7x7)/Cube 0:

Measurement grid: dx=5mm, dy=5mm, dz=5mm
Reference Value = 178.6 V/m; Power Drift = -0.06 dB
Peak SAR (extrapolated) = 110 W/kg
SAR(1 g) = 52.6 W/kg; SAR(10 g) = 24.3 W/kg
Maximum value of SAR (measured) = 60.4 W/kg

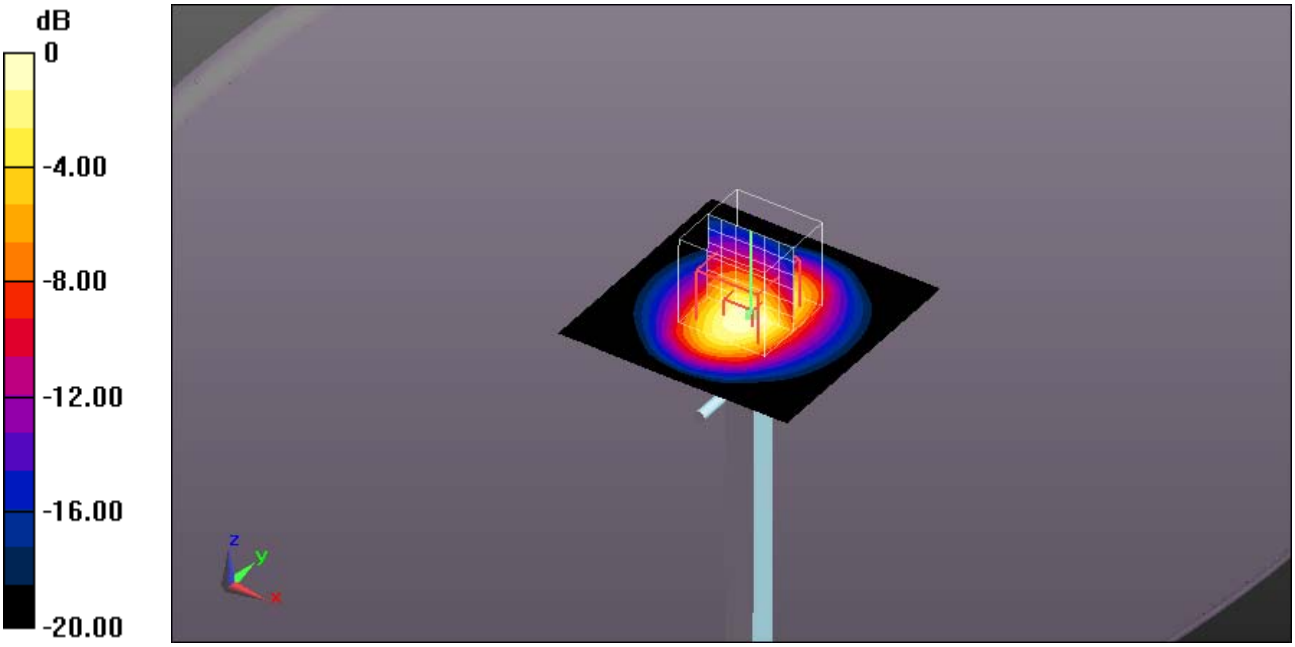

0 dB = 60.4 W/kg = 17.81 dBW/kg

Additional information:
ambient temperature: 22.1°C; liquid temperature: 21.6°C

Date/Time: 26.02.2014 13:46:20

SystemPerformanceCheck-D5GHz body 2014-02-26

DUT: Dipole 5 GHz; Type: D5GHzV2; Serial: 1055
Communication System: UID 0, CW (0); Communication System Band: D5GHz (5000.0 - 6000.0 MHz);
Frequency: 5200 MHz; Communication System PAR: 0 dB; PMF: 1
Medium parameters used: f = 5200 MHz; σ = 5.217 S/m; ε_r = 48.385; ρ = 1000 kg/m^3
Phantom section: Flat Section
Measurement Standard: DASY5
DASY5 Configuration:
- Probe: EX3DV4 - SN3944; ConvF(4.47, 4.47, 4.47); Calibrated: 02.08.2013;
- Sensor-Surface: 2mm (Mechanical Surface Detection), z = 1.0, 23.0
- Electronics: DAE3 Sn413; Calibrated: 16.01.2014
- Phantom: ELI 4.0; Type: QDOVA001BA; Serial: 1046
- DASY52 52.8.7(1137); SEMCAD X 14.6.10(7164)

MSL 5GHz/d=10mm, Pin=100mW 5.2GHz/Area Scan (61x61x1): Interpolated grid: dx=1.000 mm, dy=1.000 mm

Maximum value of SAR (interpolated) = 15.8 W/kg

MSL 5GHz/d=10mm, Pin=100mW 5.2GHz/Zoom Scan (7x7x12)/Cube 0:

Measurement grid: dx=4mm, dy=4mm, dz=2mm
Reference Value = 59.139 V/m; Power Drift = -0.12 dB
Peak SAR (extrapolated) = 30.1 W/kg
SAR(1 g) = 7.23 W/kg; SAR(10 g) = 2.03 W/kg
Maximum value of SAR (measured) = 15.4 W/kg

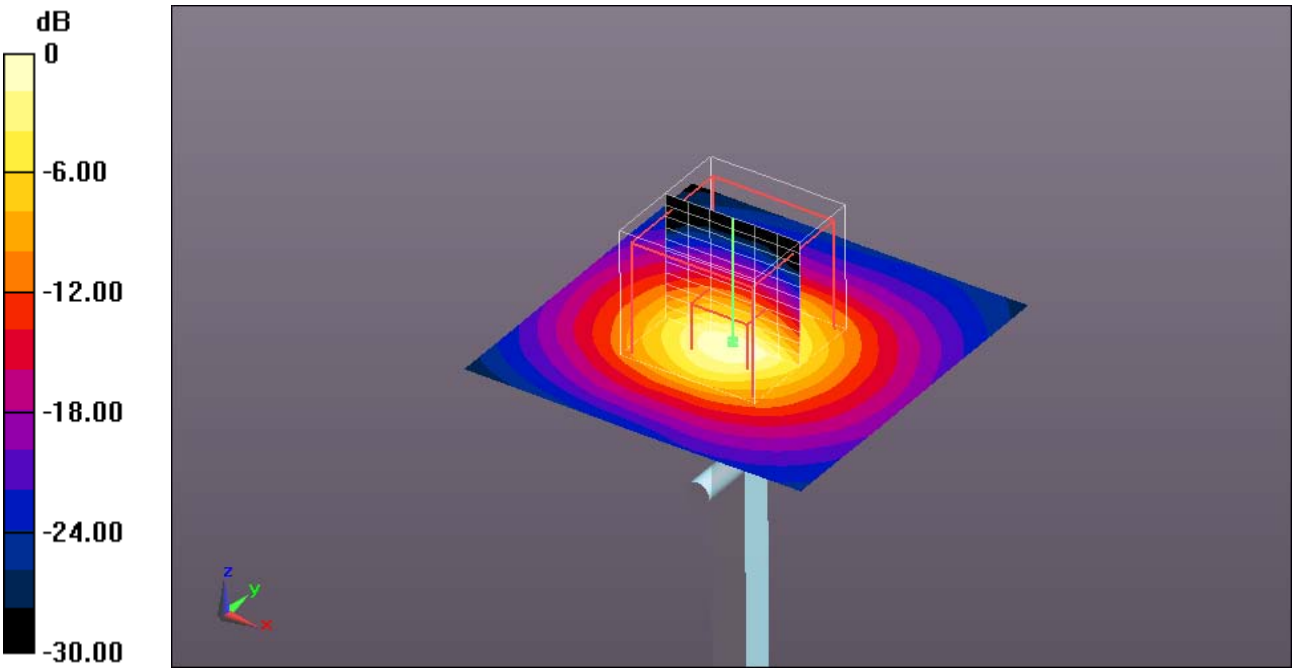

0 dB = 15.4 W/kg = 11.88 dBW/kg

Additional information:
ambient temperature: 22.1°C; liquid temperature: 21.6°C

Date/Time: 26.02.2014 14:10:09

SystemPerformanceCheck-D5GHz body 2014-02-26

DUT: Dipole 5 GHz; Type: D5GHzV2; Serial: 1055
Communication System: UID 0, CW (0); Communication System Band: D5GHz (5000.0 - 6000.0 MHz); Frequency: 5500 MHz; Communication System PAR: 0 dB; PMF: 1
Medium parameters used: f = 5500 MHz; σ = 5.606 S/m; ε_r = 47.627; ρ = 1000 kg/m^3
Phantom section: Flat Section
Measurement Standard: DASY5
DASY5 Configuration:
- Probe: EX3DV4 - SN3944; ConvF(4.09, 4.09, 4.09); Calibrated: 02.08.2013;
- Sensor-Surface: 2mm (Mechanical Surface Detection (Locations From Previous Scan Used)), Sensor-Surface: 2mm (Mechanical Surface Detection), z = 1.0, 23.0
- Electronics: DAE3 Sn413; Calibrated: 16.01.2014
- Phantom: ELI 4.0; Type: QDOVA001BA; Serial: 1046
- DASY52 52.8.7(1137); SEMCAD X 14.6.10(7164)

MSL 5GHz/d=10mm, Pin=100mW 5.5GHz/Area Scan (61x61x1): Interpolated grid: dx=1.000 mm, dy=1.000 mm

Maximum value of SAR (interpolated) = 15.9 W/kg

MSL 5GHz/d=10mm, Pin=100mW 5.5GHz/Zoom Scan (8x8x12)/Cube 0:

Measurement grid: dx=4mm, dy=4mm, dz=2mm
Reference Value = 58.778 V/m; Power Drift = -0.10 dB
Peak SAR (extrapolated) = 31.4 W/kg
SAR(1 g) = 7.33 W/kg; SAR(10 g) = 2.03 W/kg
Maximum value of SAR (measured) = 15.6 W/kg

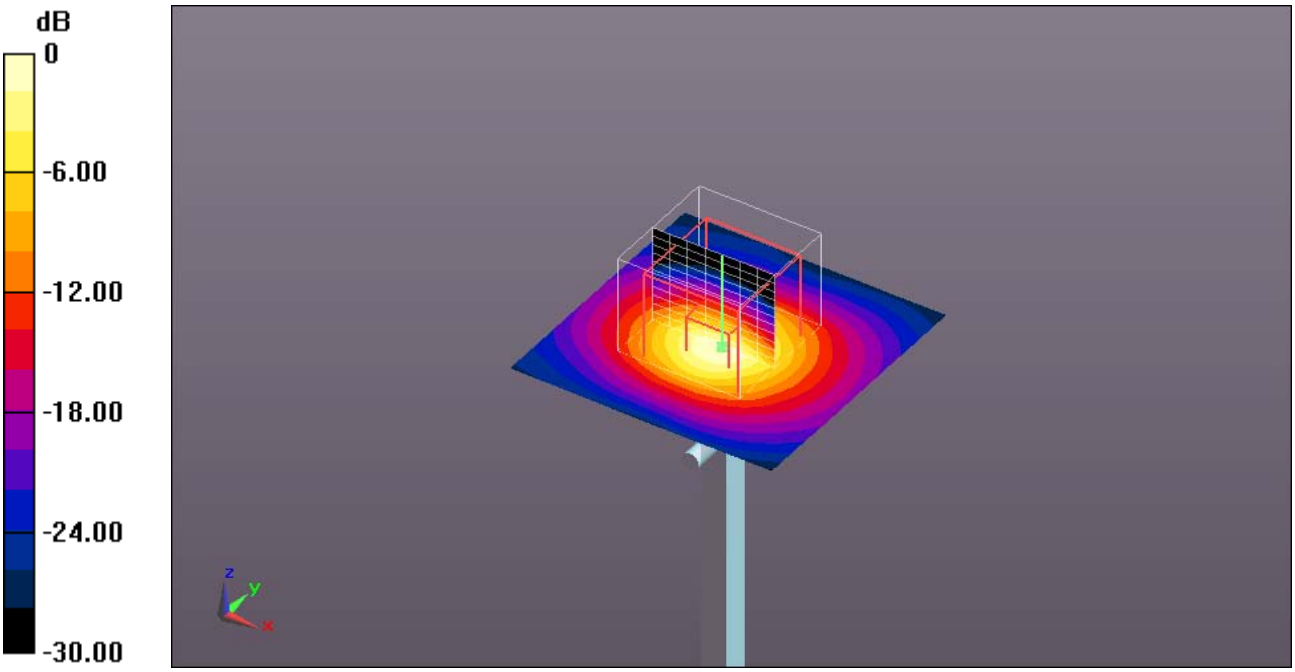

0 dB = 15.6 W/kg = 11.93 dBW/kg

Additional information:
ambient temperature: 22.1°C; liquid temperature: 21.6°C

Date/Time: 26.02.2014 14:35:53

SystemPerformanceCheck-D5GHz body 2014-02-26

DUT: Dipole 5 GHz; Type: D5GHzV2; Serial: 1055
Communication System: UID 0, CW (0); Communication System Band: D5GHz (5000.0 - 6000.0 MHz); Frequency: 5800 MHz; Communication System PAR: 0 dB; PMF: 1
Medium parameters used: f = 5800 MHz; σ = 5.962 S/m; ε_r = 47.058; ρ = 1000 kg/m^3
Phantom section: Flat Section
Measurement Standard: DASY5
DASY5 Configuration:
- Probe: EX3DV4 - SN3944; ConvF(4.2, 4.2, 4.2); Calibrated: 02.08.2013;
- Sensor-Surface: 2mm (Mechanical Surface Detection (Locations From Previous Scan Used)), Sensor-Surface: 2mm (Mechanical Surface Detection), z = 1.0, 23.0
- Electronics: DAE3 Sn413; Calibrated: 16.01.2014
- Phantom: ELI 4.0; Type: QDOVA001BA; Serial: 1046
- DASY52 52.8.7(1137); SEMCAD X 14.6.10(7164)

MSL 5GHz/d=10mm, Pin=100mW 5.8GHz/Area Scan (61x61x1): Interpolated grid: dx=1.000 mm, dy=1.000 mm

Maximum value of SAR (interpolated) = 15.4 W/kg

MSL 5GHz/d=10mm, Pin=100mW 5.8GHz/Zoom Scan (8x8x12)/Cube 0:

Measurement grid: dx=4mm, dy=4mm, dz=2mm
Reference Value = 55.031 V/m; Power Drift = 0.11 dB
Peak SAR (extrapolated) = 32.6 W/kg
SAR(1 g) = 7.09 W/kg; SAR(10 g) = 1.95 W/kg
Maximum value of SAR (measured) = 15.7 W/kg

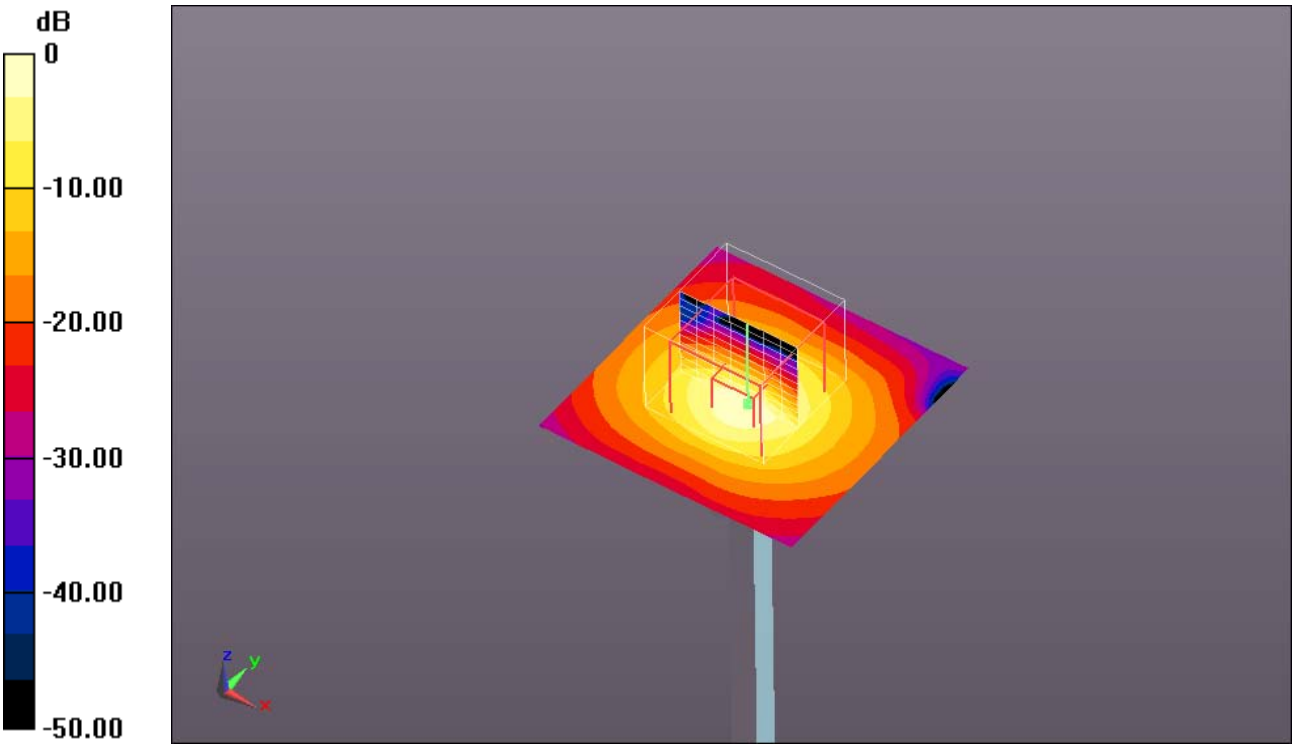

0 dB = 15.7 W/kg = 11.96 dBW/kg

Additional information:
ambient temperature: 22.1°C; liquid temperature: 21.6°C

Annex B: DASY5 measurement results

SAR plots for **the highest measured SAR** in each exposure configuration, wireless mode and frequency band combination according to FCC KDB 865664 D02

Annex B.1: GSM 850MHz

Date/Time: 19.02.2014 15:48:42

FCC_EN62209-2-GSM850 body

DUT: Sony; Serial: CB5126DAGA
Communication System: UID 0, GSM/GPRS 1TS (0); Communication System Band: GSM 850 (824.0 - 849.0 MHz); Frequency: 824.2 MHz; Communication System PAR: 9.191 dB; PMF: 2.88104
Medium parameters used (interpolated): f = 824.2 MHz; σ = 0.993 S/m; ε_r = 55.721; ρ = 1000 kg/m^3
Phantom section: Flat Section
Measurement Standard: DASY5
DASY5 Configuration:
- Probe: ES3DV3 - SN3320; ConvF(6.29, 6.29, 6.29); Calibrated: 04.06.2013;
- Sensor-Surface: 4mm (Mechanical Surface Detection (Locations From Previous Scan Used)), Sensor-Surface: 4mm (Mechanical Surface Detection), z = 2.0, 32.0
- Electronics: DAE3 Sn413; Calibrated: 16.01.2014
- Phantom: ELI 4.0; Type: QDOVA001BA; Serial: 1046
- DASY52 52.8.7(1137); SEMCAD X 14.6.10(7164)

MSL835 - backoff power - 1TS/Rear Position - Low - 0mm/Area Scan (151x211x1): Interpolated grid: dx=1.500 mm, dy=1.500 mm

Maximum value of SAR (interpolated) = 1.12 W/kg

MSL835 - backoff power - 1TS/Rear Position - Low - 0mm/Zoom Scan (5x5x7)/Cube 0: Measurement grid: dx=7.5mm, dy=7.5mm, dz=5mm

Reference Value = 31.594 V/m; Power Drift = -0.03 dB
Peak SAR (extrapolated) = 1.90 W/kg
SAR(1 g) = 0.929 W/kg; SAR(10 g) = 0.506 W/kg
Maximum value of SAR (measured) = 0.971 W/kg

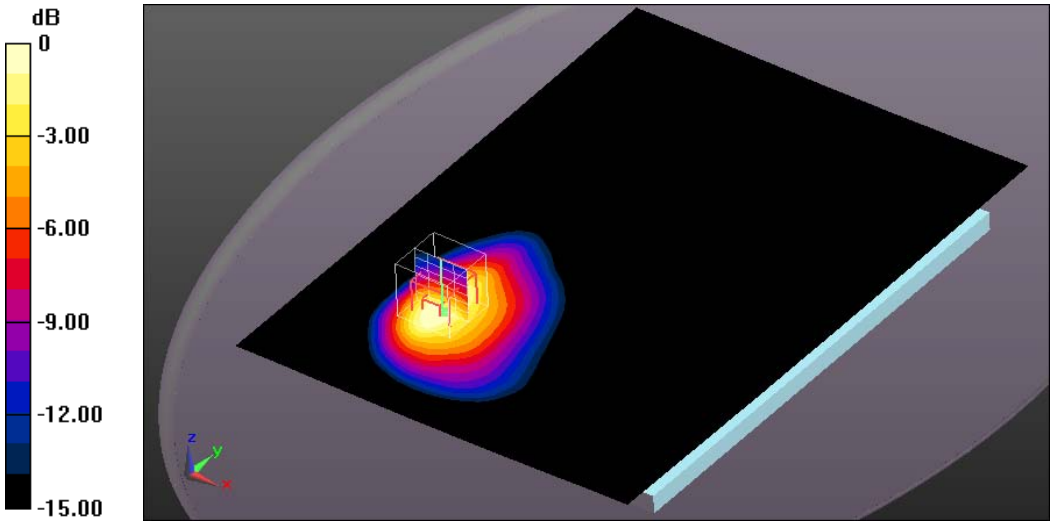

0 dB = 0.971 W/kg = -0.13 dBW/kg

Additional information:
position or distance of DUT to SAM: 0mm
ambient temperature: 22.0°C; liquid temperature: 21.7°C

Annex B.2: GSM 1900MHz

Date/Time: 20.02.2014 15:03:03

FCC_EN62209-2-GSM1900 body

DUT: Sony; Serial: CB5126DAGA
Communication System: UID 0, GSM/GPRS 2TS (0); Communication System Band: GSM 1900; Frequency: 1909.8 MHz; Communication System PAR: 6.021 dB; PMF: 2.00009
Medium parameters used: f = 1910 MHz; σ = 1.544 S/m; ε_r = 52.805; ρ = 1000 kg/m^3
Phantom section: Flat Section
Measurement Standard: DASY5
DASY5 Configuration:
- Probe: ES3DV3 - SN3320; ConvF(4.78, 4.78, 4.78); Calibrated: 04.06.2013;
- Sensor-Surface: 4mm (Mechanical Surface Detection (Locations From Previous Scan Used)), Sensor-Surface: 4mm (Mechanical Surface Detection), z = 2.0, 32.0
- Electronics: DAE3 Sn413; Calibrated: 16.01.2014
- Phantom: ELI 4.0; Type: QDOVA001BA; Serial: 1046
- DASY52 52.8.7(1137); SEMCAD X 14.6.10(7164)

MSL1900 - backoff power - 2TS/Rear Position - High - 0mm/Area Scan (151x211x1): Interpolated grid: dx=1.500 mm, dy=1.500 mm

Maximum value of SAR (interpolated) = 1.02 W/kg

MSL1900 - backoff power - 2TS/Rear Position - High - 0mm/Zoom Scan (5x5x7)/Cube 0: Measurement grid: dx=7.5mm, dy=7.5mm, dz=5mm

Reference Value = 20.311 V/m; Power Drift = -0.11 dB
Peak SAR (extrapolated) = 1.65 W/kg
SAR(1 g) = 0.772 W/kg; SAR(10 g) = 0.344 W/kg
Maximum value of SAR (measured) = 0.940 W/kg

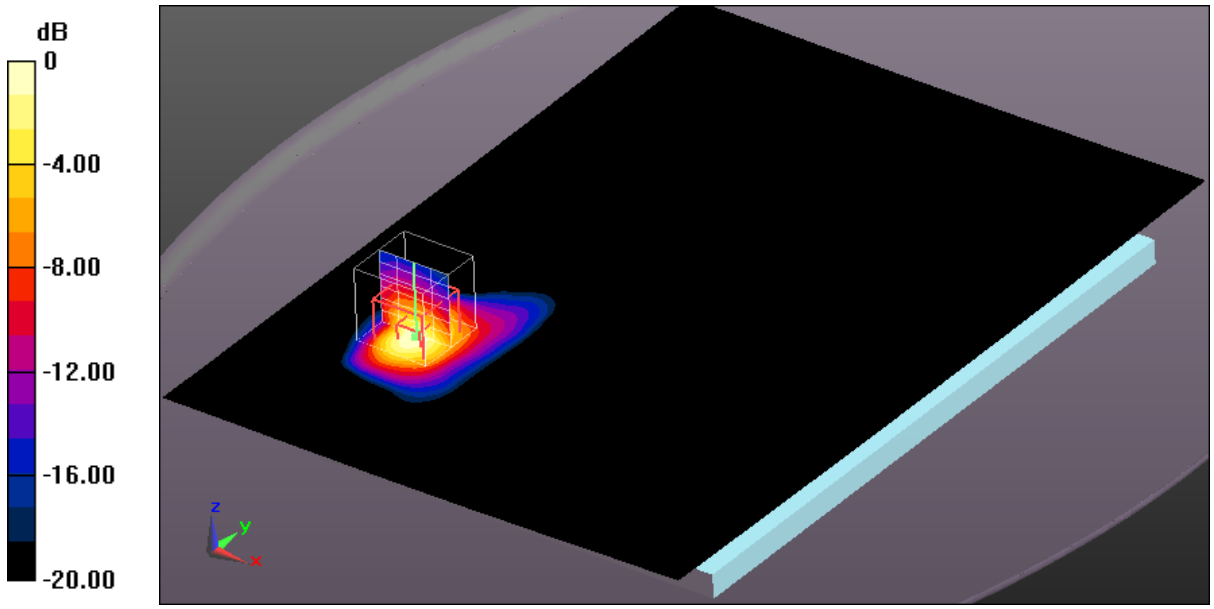

0 dB = 0.940 W/kg = -0.27 dBW/kg

Additional information:
position or distance of DUT to SAM: 0mm
ambient temperature: 22.5°C; liquid temperature: 21.8°C

Annex B.3: UMTS FDD II

Date/Time: 20.02.2014 21:15:43

FCC_EN62209-2-UMTS FDD II body

DUT: Sony; Serial: CB5126DAGZ
Communication System: UID 0, UMTS FDD (0); Communication System Band: UMTS FDD II; Frequency: 1907.6 MHz; Communication System PAR: 0 dB; PMF: 1
Medium parameters used: f = 1908 MHz; σ = 1.541 S/m; ε_r = 52.791; ρ = 1000 kg/m^3
Phantom section: Flat Section
Measurement Standard: DASY5
DASY5 Configuration:
- Probe: ES3DV3 - SN3320; ConvF(4.78, 4.78, 4.78); Calibrated: 04.06.2013;
- Sensor-Surface: 4mm (Mechanical Surface Detection (Locations From Previous Scan Used)), Sensor-Surface: 4mm (Mechanical Surface Detection), z = 2.0, 32.0
- Electronics: DAE3 Sn413; Calibrated: 16.01.2014
- Phantom: ELI 4.0; Type: QDOVA001BA; Serial: 1046
- DASY52 52.8.7(1137); SEMCAD X 14.6.10(7164)

MSL1900 - default power/Top Side Position - High - 15mm WC/Area Scan (61x211x1): Interpolated grid: dx=1.500 mm, dy=1.500 mm

Maximum value of SAR (interpolated) = 0.988 W/kg

MSL1900 - default power/Top Side Position - High - 15mm WC/Zoom Scan (5x5x7)/Cube 0: Measurement grid: dx=7.5mm, dy=7.5mm, dz=5mm

Reference Value = 25.648 V/m; Power Drift = 0.08 dB
Peak SAR (extrapolated) = 1.51 W/kg
SAR(1 g) = 0.901 W/kg; SAR(10 g) = 0.499 W/kg
Maximum value of SAR (measured) = 1.01 W/kg

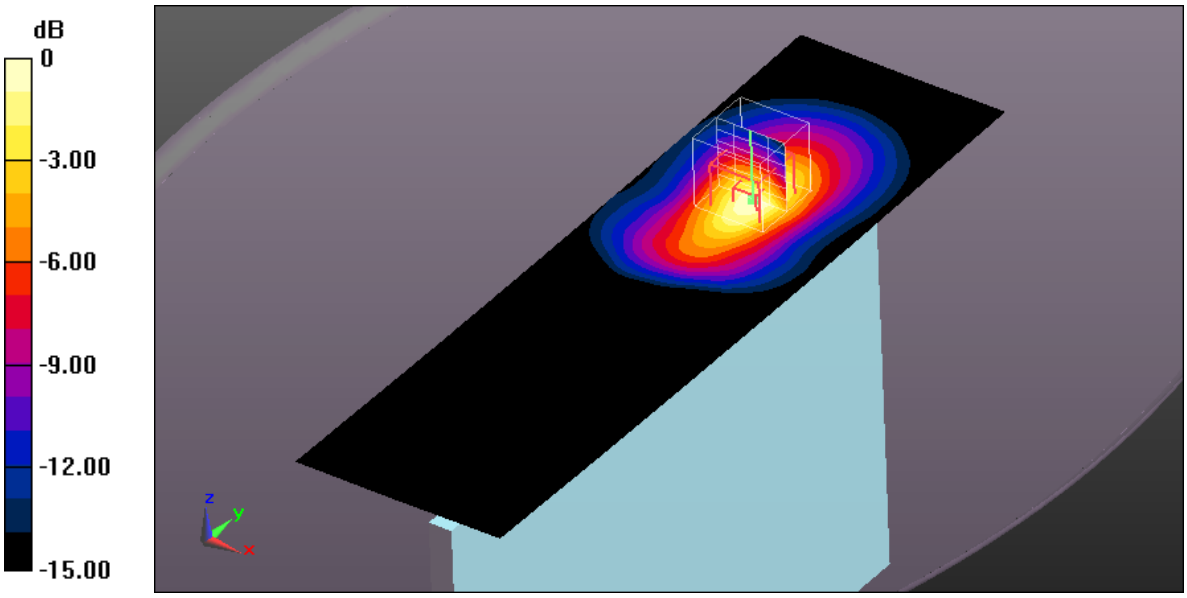

0 dB = 1.01 W/kg = 0.04 dBW/kg

Additional information:
position or distance of DUT to SAM: 15mm
ambient temperature: 22.5°C; liquid temperature: 21.8°C

Annex B.4: UMTS FDD V

Date/Time: 20.02.2014 07:53:22

FCC_EN62209-2-UMTS V body

DUT: Sony; Serial: CB5126DAGK
Communication System: UID 0, UMTS FDD (0); Communication System Band: UMTS FDD V; Frequency: 826.4 MHz; Communication System PAR: 0 dB; PMF: 1
Medium parameters used (interpolated): f = 826.4 MHz; σ = 0.995 S/m; ε_r = 55.702; ρ = 1000 kg/m^3
Phantom section: Flat Section
Measurement Standard: DASY5
DASY5 Configuration:
- Probe: ES3DV3 - SN3320; ConvF(6.29, 6.29, 6.29); Calibrated: 04.06.2013;
- Sensor-Surface: 4mm (Mechanical Surface Detection (Locations From Previous Scan Used)), Sensor-Surface: 4mm (Mechanical Surface Detection), z = 2.0, 32.0
- Electronics: DAE3 Sn413; Calibrated: 16.01.2014
- Phantom: ELI 4.0; Type: QDOVA001BA; Serial: 1046
- DASY52 52.8.7(1137); SEMCAD X 14.6.10(7164)

MSL835 - backoff power/Rear Position - Low - 0mm/Area Scan (151x211x1): Interpolated grid: dx=1.500 mm, dy=1.500 mm

Maximum value of SAR (interpolated) = 0.826 W/kg

MSL835 - backoff power/Rear Position - Low - 0mm/Zoom Scan (5x5x7)/Cube 0: Measurement grid: dx=7.5mm, dy=7.5mm, dz=5mm

Reference Value = 26.490 V/m; Power Drift = -0.01 dB
Peak SAR (extrapolated) = 1.29 W/kg
SAR(1 g) = 0.649 W/kg; SAR(10 g) = 0.356 W/kg
Maximum value of SAR (measured) = 0.677 W/kg

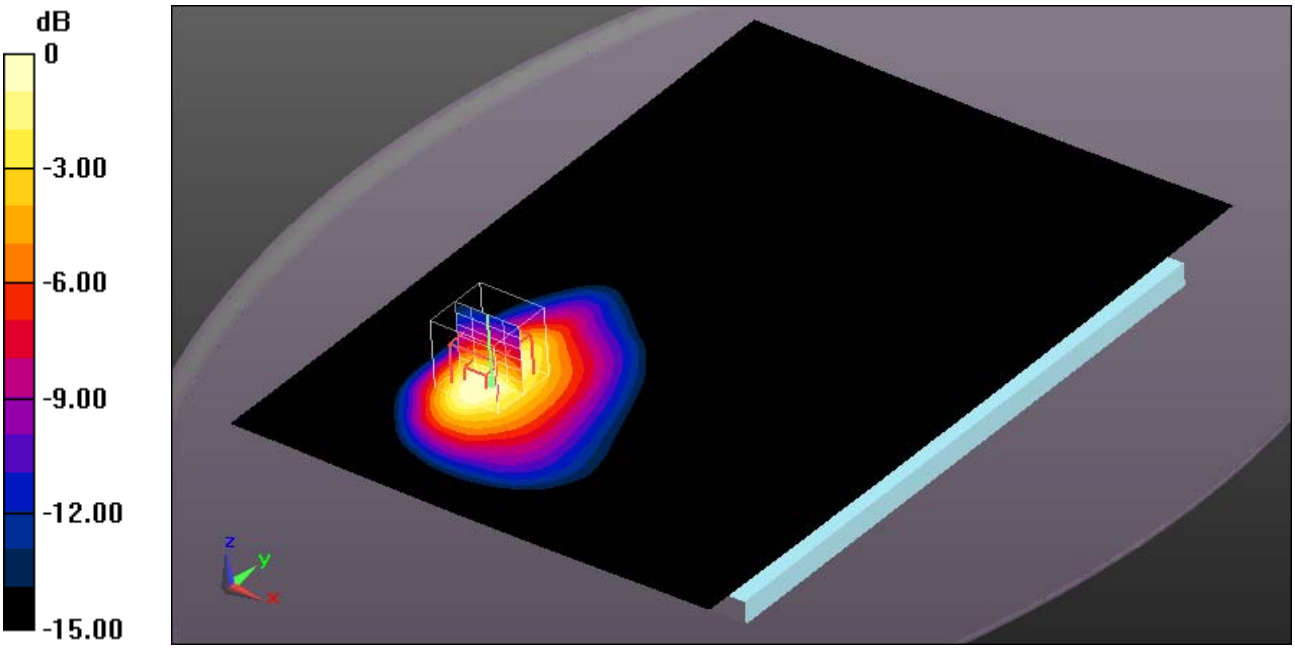

0 dB = 0.677 W/kg = -1.69 dBW/kg

Additional information:
position or distance of DUT to SAM: 0mm
ambient temperature: 22.4°C; liquid temperature: 22.0°C

Annex B.5: LTE FDD 17

Date/Time: 21.02.2014 13:53:14

FCC_EN62209-2-LTE FDD 17 body

DUT: Sony; Serial: CB5126DAGB
Communication System: UID 0, LTE FDD (0); Communication System Band: LTE 17 (700MHz); Frequency: 711 MHz; Communication System PAR: 0 dB; PMF: 1
Medium parameters used: f = 711 MHz; σ = 0.931 S/m; ε_r = 55.041; ρ = 1000 kg/m^3
Phantom section: Flat Section
Measurement Standard: DASY5
DASY5 Configuration:
- Probe: ES3DV3 - SN3320; ConvF(6.36, 6.36, 6.36); Calibrated: 04.06.2013;
- Sensor-Surface: 4mm (Mechanical Surface Detection (Locations From Previous Scan Used)), Sensor-Surface: 4mm (Mechanical Surface Detection), z = 2.0, 32.0
- Electronics: DAE3 Sn413; Calibrated: 16.01.2014
- Phantom: ELI 4.0; Type: QDOVA001BA; Serial: 1046
- DASY52 52.8.7(1137); SEMCAD X 14.6.10(7164)

MSL750 - backoff power - QPSK - 10MHz BW - 25RB/Rear Position - High - 0mm - 0RB offset/Area Scan (151x211x1): Interpolated grid: dx=1.500 mm, dy=1.500 mm

Maximum value of SAR (interpolated) = 0.772 W/kg

MSL750 - backoff power - QPSK - 10MHz BW - 25RB/Rear Position - High - 0mm - 0RB offset/Zoom Scan (5x5x7)/Cube 0: Measurement grid: dx=7.5mm, dy=7.5mm, dz=5mm

Reference Value = 28.057 V/m; Power Drift = 0.04 dB
Peak SAR (extrapolated) = 1.69 W/kg
SAR(1 g) = 0.739 W/kg; SAR(10 g) = 0.383 W/kg
Maximum value of SAR (measured) = 0.788 W/kg

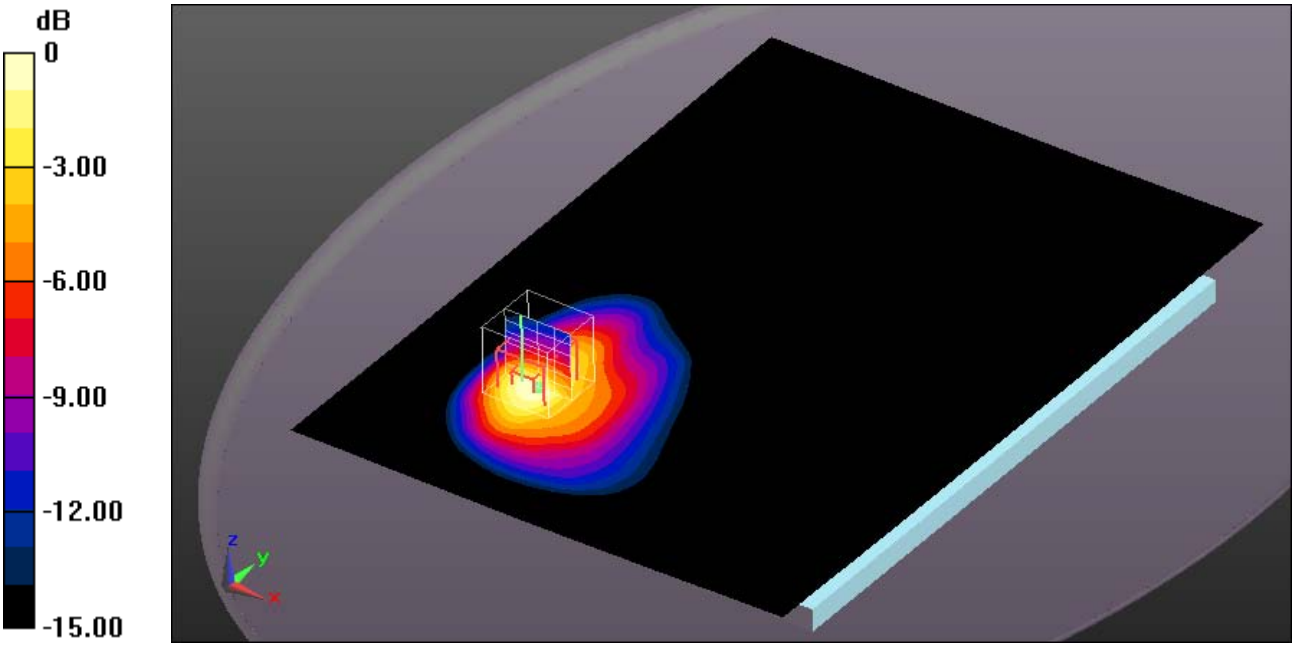

0 dB = 0.788 W/kg = -1.03 dBW/kg

Additional information:
position or distance of DUT to SAM: 0mm
ambient temperature: 21.8°C; liquid temperature: 21.3°C

Annex B.6: WLAN 2450MHz

Date/Time: 24.02.2014 12:41:49

FCC_EN62209-2 WLAN 2450 body

DUT: Sony; Serial: CB5126DAHX
Communication System: UID 0, WLAN 2450 (0); Communication System Band: 2.4 GHz; Frequency: 2437 MHz; Communication System PAR: 0 dB; PMF: 1
Medium parameters used: f = 2437 MHz; σ = 1.941 S/m; ε_r = 51.48; ρ = 1000 kg/m^3
Phantom section: Flat Section
Measurement Standard: DASY5
DASY5 Configuration:
- Probe: ES3DV3 - SN3320; ConvF(4.36, 4.36, 4.36); Calibrated: 04.06.2013;
- Sensor-Surface: 4mm (Mechanical Surface Detection (Locations From Previous Scan Used)), Sensor-Surface: 4mm (Mechanical Surface Detection), z = 2.0, 32.0
- Electronics: DAE3 Sn413; Calibrated: 16.01.2014
- Phantom: ELI 4.0; Type: QDOVA001BA; Serial: 1046
- DASY52 52.8.7(1137); SEMCAD X 14.6.10(7164)

MSL2450/Rear Position - Middle - 0mm/Area Scan (211x311x1): Interpolated grid: dx=1.000 mm, dy=1.000 mm

Maximum value of SAR (interpolated) = 0.631 W/kg

MSL2450/Rear Position - Middle - 0mm/Zoom Scan (7x7x7)/Cube 0:

Measurement grid: dx=5mm, dy=5mm, dz=5mm
Reference Value = 17.730 V/m; Power Drift = -0.10 dB
Peak SAR (extrapolated) = 1.70 W/kg
SAR(1 g) = 0.520 W/kg; SAR(10 g) = 0.181 W/kg
Maximum value of SAR (measured) = 0.617 W/kg

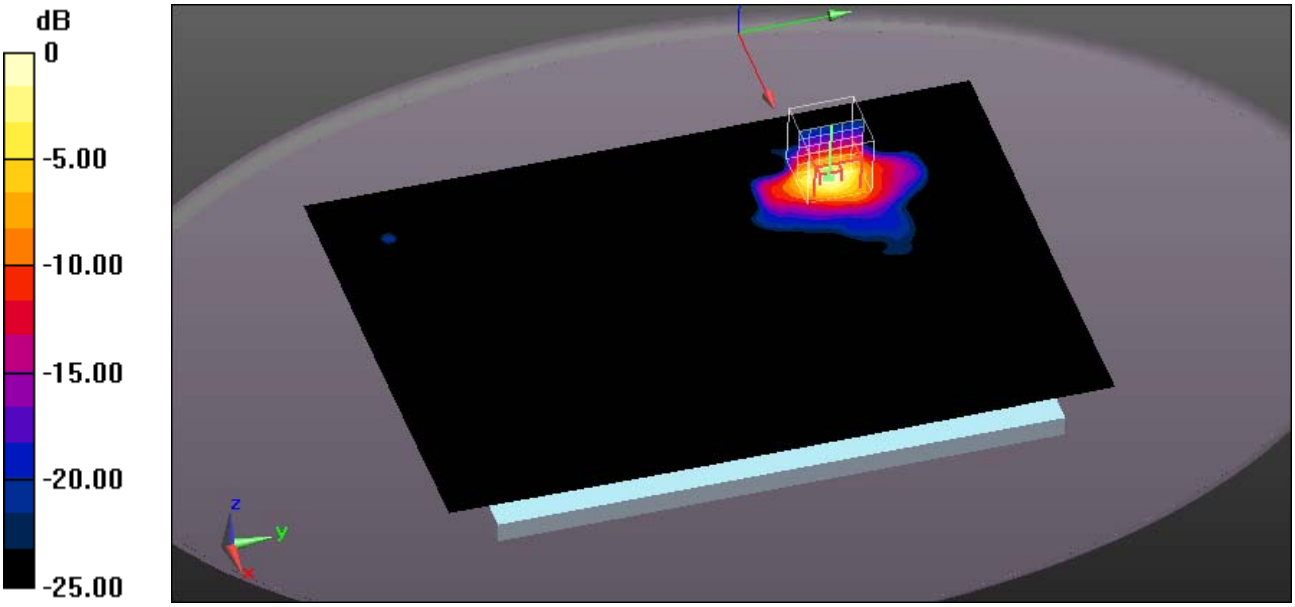

0 dB = 0.617 W/kg = -2.10 dBW/kg

Additional information:
position or distance of DUT to SAM: 0mm
ambient temperature: 22.1°C; liquid temperature: 21.6°C

Annex B.7: WLAN 5GHz

Date/Time: 26.02.2014 11:37:53

FCC_EN62209-2-WLAN5GHz-body

DUT: Sony; Serial: CB5126DAHF
Communication System: UID 0, WLAN 5GHz (0); Communication System Band: 5 GHz Band; Frequency: 5500 MHz; Communication System PAR: 0 dB; PMF: 1
Medium parameters used: f = 5500 MHz; σ = 5.606 S/m; ε_r = 47.627; ρ = 1000 kg/m^3
Phantom section: Flat Section
Measurement Standard: DASY5
DASY5 Configuration:
- Probe: EX3DV4 - SN3944; ConvF(4.09, 4.09, 4.09); Calibrated: 02.08.2013;
- Sensor-Surface: 2mm (Mechanical Surface Detection (Locations From Previous Scan Used)), Sensor-Surface: 2mm (Mechanical Surface Detection), z = 1.0, 23.0
- Electronics: DAE3 Sn413; Calibrated: 16.01.2014
- Phantom: ELI 4.0; Type: QDOVA001BA; Serial: 1046
- DASY52 52.8.7(1137); SEMCAD X 14.6.10(7164)

MSL5GHz/Top Side Position - Ch100/Area Scan (91x311x1): Interpolated grid: dx=1.000 mm, dy=1.000 mm

Maximum value of SAR (interpolated) = 2.16 W/kg

MSL5GHz/Top Side Position - Ch100/Zoom Scan (8x8x12)/Cube 0:

Measurement grid: dx=4mm, dy=4mm, dz=2mm
Reference Value = 14.182 V/m; Power Drift = -0.10 dB
Peak SAR (extrapolated) = 5.66 W/kg
SAR(1 g) = 0.608 W/kg; SAR(10 g) = 0.139 W/kg
Maximum value of SAR (measured) = 1.32 W/kg

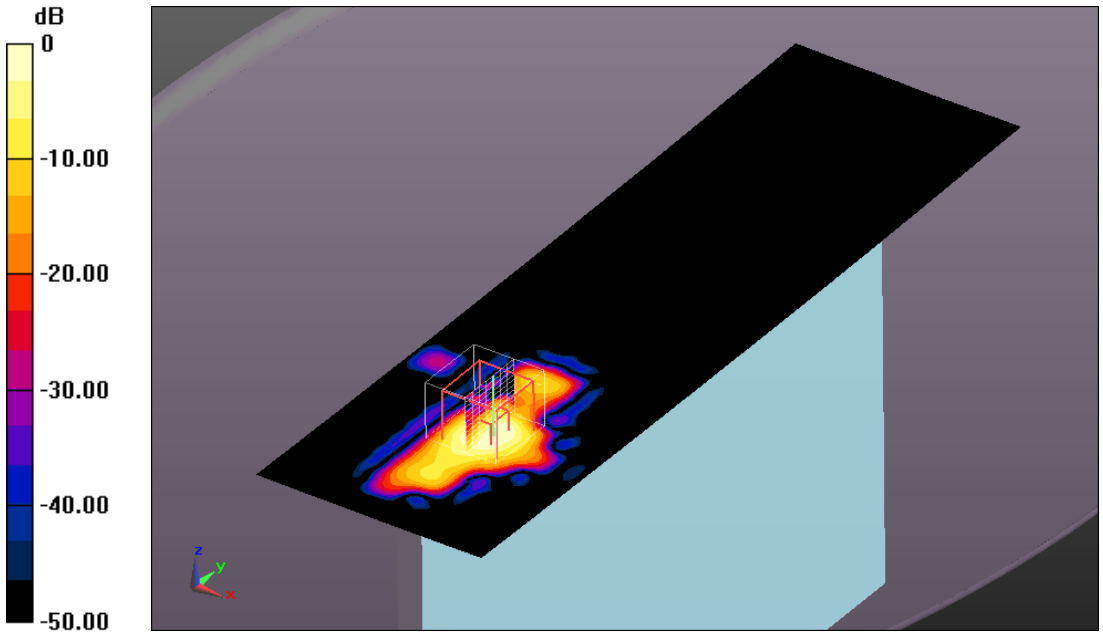

0 dB = 1.32 W/kg = 1.21 dBW/kg

Additional information:
position or distance of DUT to SAM: 0mm
ambient temperature: 22.1°C; liquid temperature: 21.6°C

Annex B.8: Liquid depth

Photo 1: Liquid depth 750 MHz body simulating liquid

Photo 2: Liquid depth 850 MHz body simulating liquid

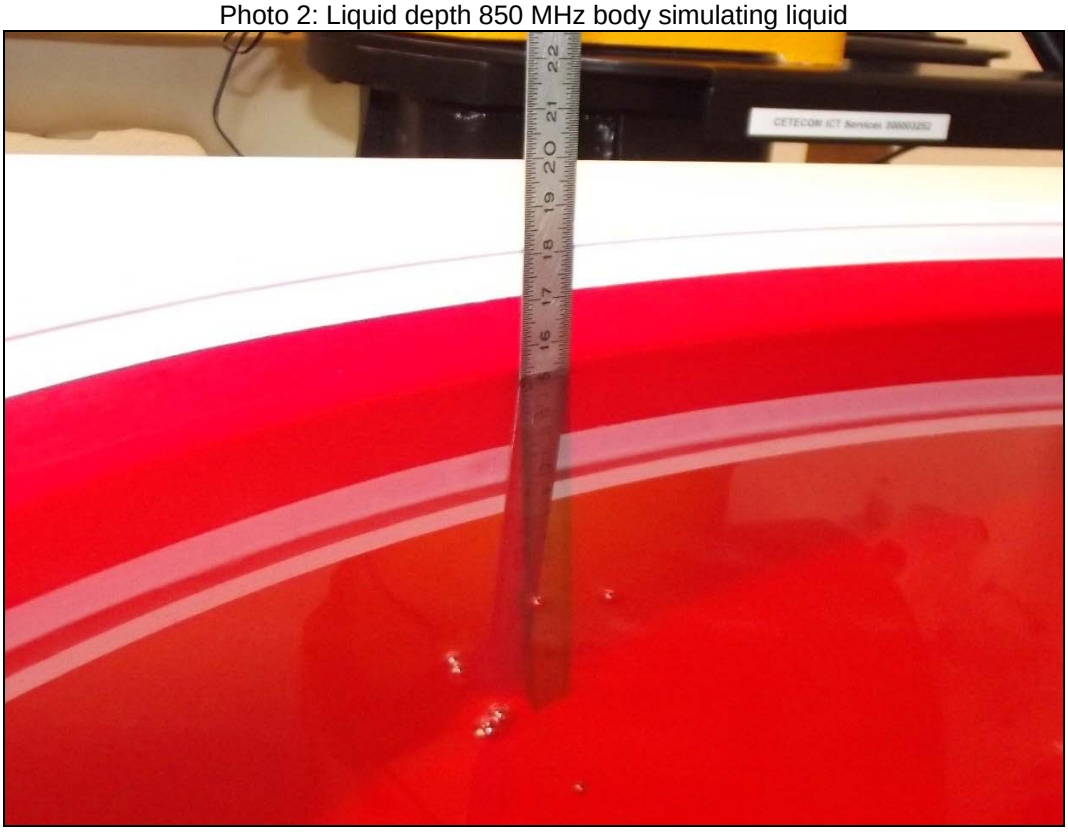

Photo 3: Liquid depth 1900 MHz body simulating liquid

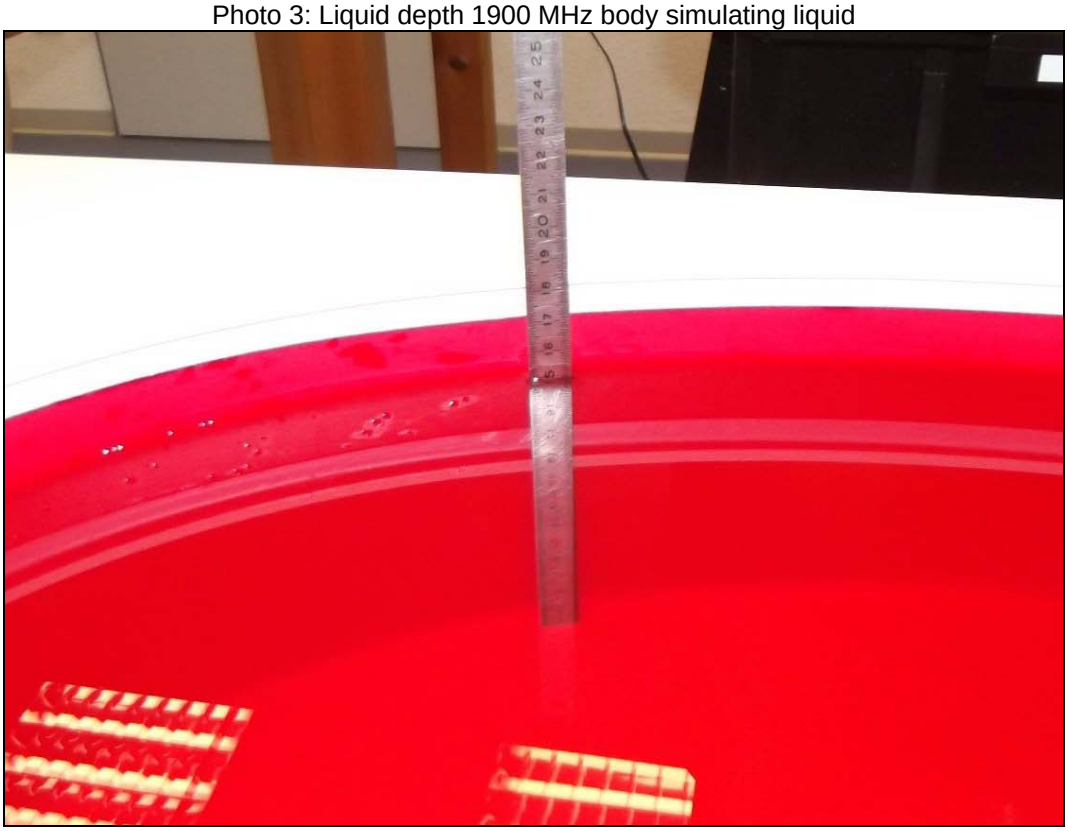

Photo 4: Liquid depth 2450 MHz body simulating liquid

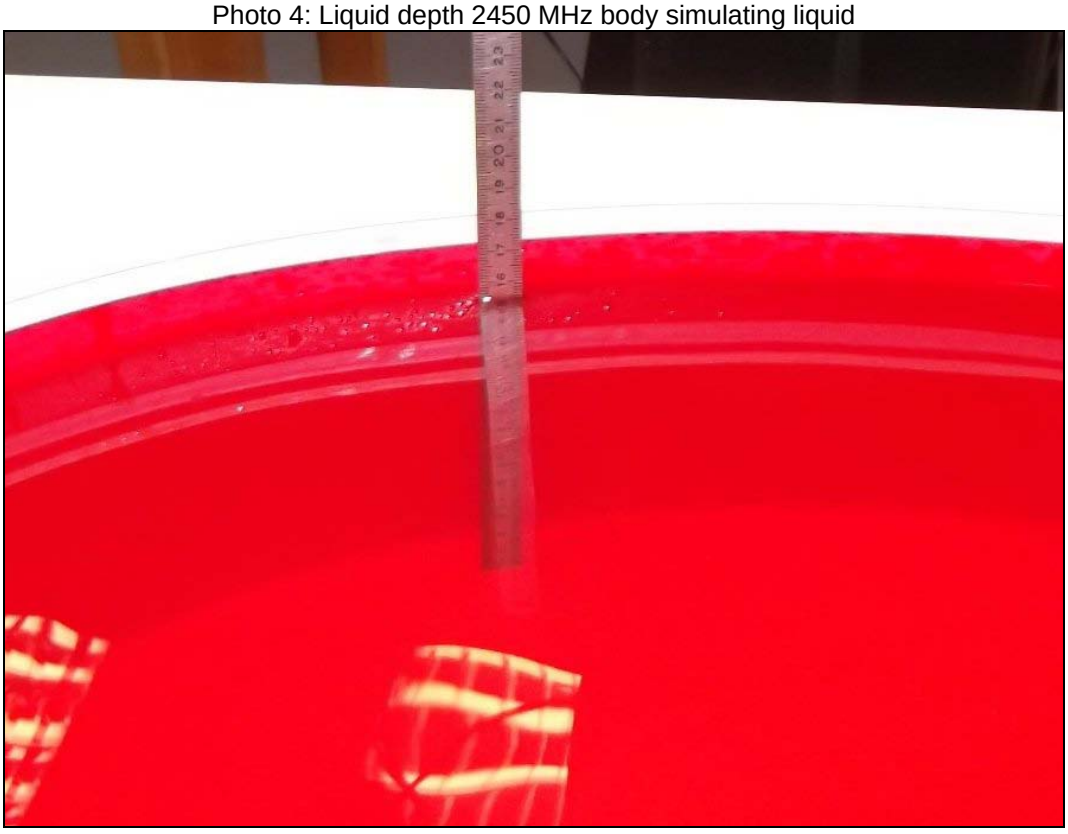

Photo 5: Liquid depth 5 GHz body simulating liquid

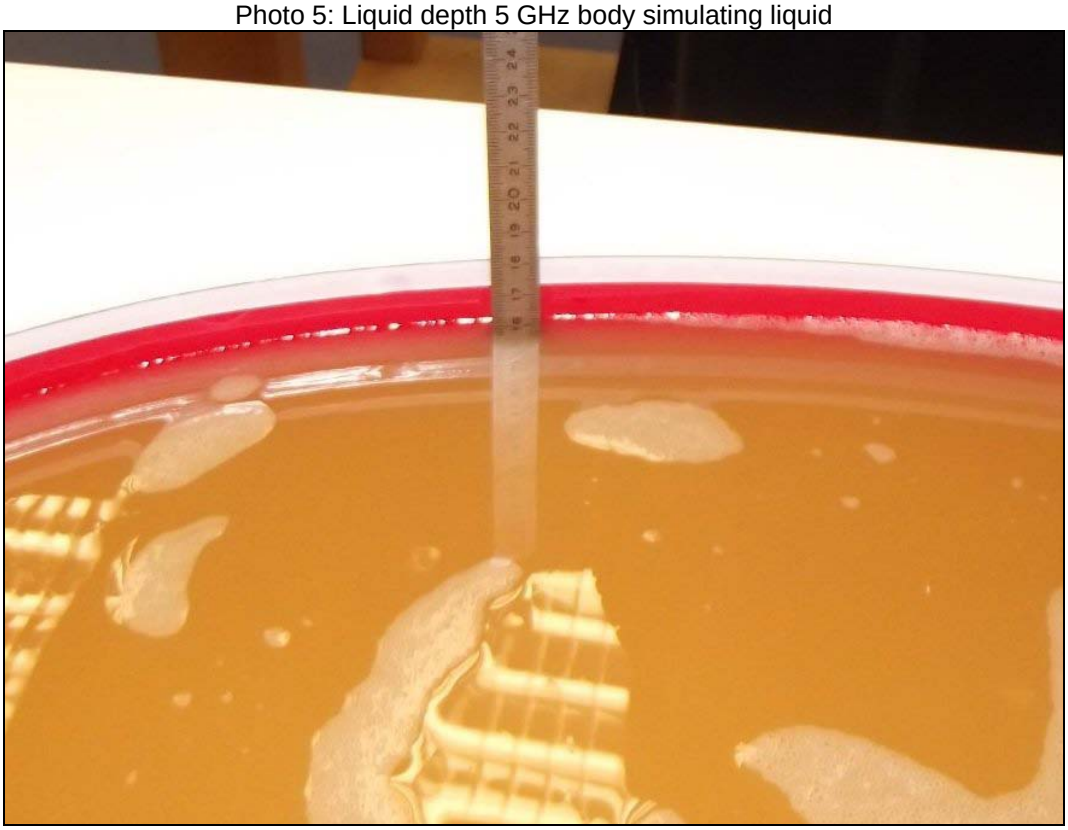

Annex C: Photo documentation

Photo documentation is described in the additional document:

Appendix to test report no. 1-6965/13-12-02 Photo documentation

Annex D: Calibration parameters

Calibration parameters are described in the additional document:

Appendix to test report no. 1-6965/13-12-02
Calibration data, Phantom certificate
and detail information of the DASY5 System

Annex E: Document History

Version	Applied Changes	Date of Release
	Initial Release	2014-03-10

Annex F: Further Information

Glossary

BW - Bandwidth
DTS - Distributed Transmission System
DUT - Device under Test
EUT - Equipment under Test
FCC - Federal Communication Commission
FCC ID - Company Identifier at FCC
HW - Hardware
IC - Industry Canada
Inv. No. - Inventory number
LTE - Long Term Evolution
N/A - not applicable
PCE - Personal Consumption Expenditure
OET - Office of Engineering and Technology
RB - resource block(s)
SAR - Specific Absorption Rate
S/N - Serial Number
$SPLSR_i$ - SAR-to-(peak-locations spacing) ratio
SW - Software
UNII - Unlicensed National Information Infrastructure