SONY

Confidential
WORK DESCRIPTION
Document number

Sony Mobile Communications

Prepared by
Hiroko Inagaki (XP020498)

Date
2017-11-27

Contents responsible if other than preparer

Remarks
This document is managed in InfoDoc.

Approved by

Label and Label Location
PY7-21831A

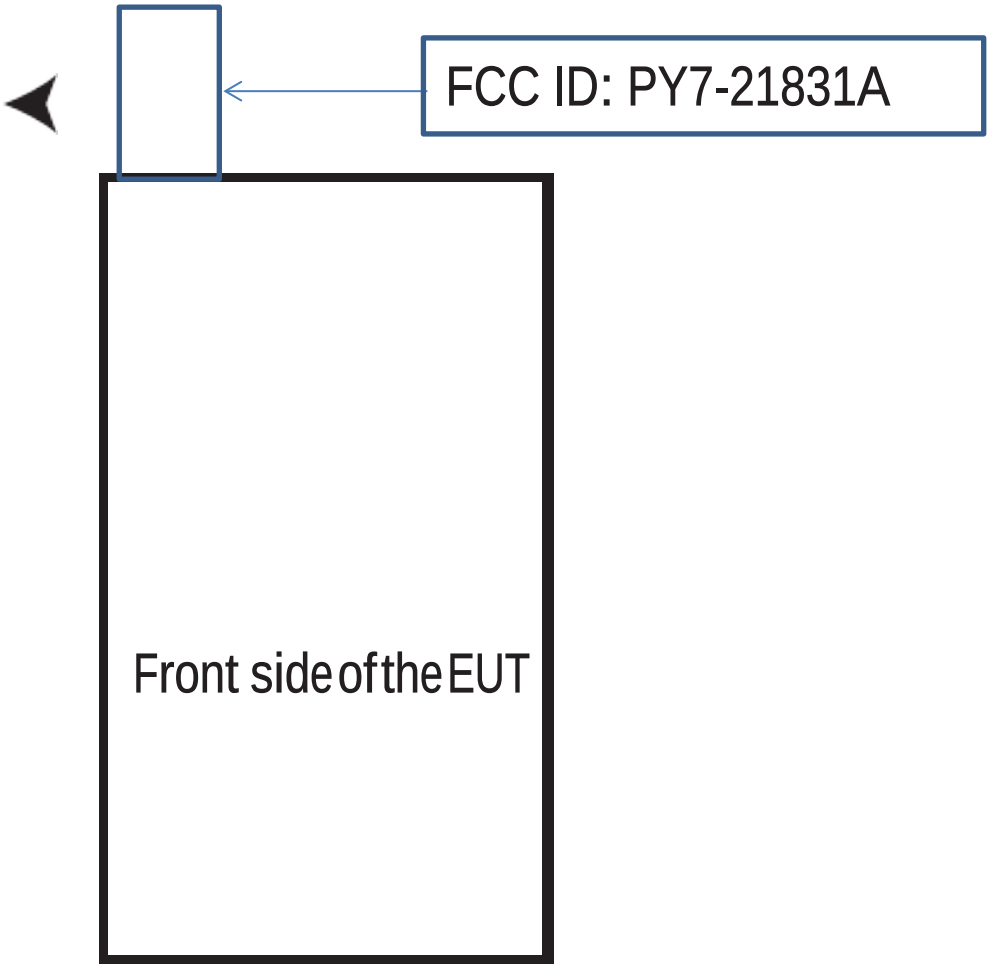

The FCC ID is not on the exterior of the device but labelling meets the conditions allowed in KDB 784748 for the label to be placed in a user accessible area:
1. The device is handheld
2. The quick start manual directs the user where to find the FCC label
3. The user does not require any special tools to access the FCC label and the label is not removable
4. The FCC ID is on the label, FCC15.19(a) statement in manual due to device size

It is the responsibility of the user to ensure that they have a correct and valid version. Any outdated hard copy is invalid and must be removed from possible use.