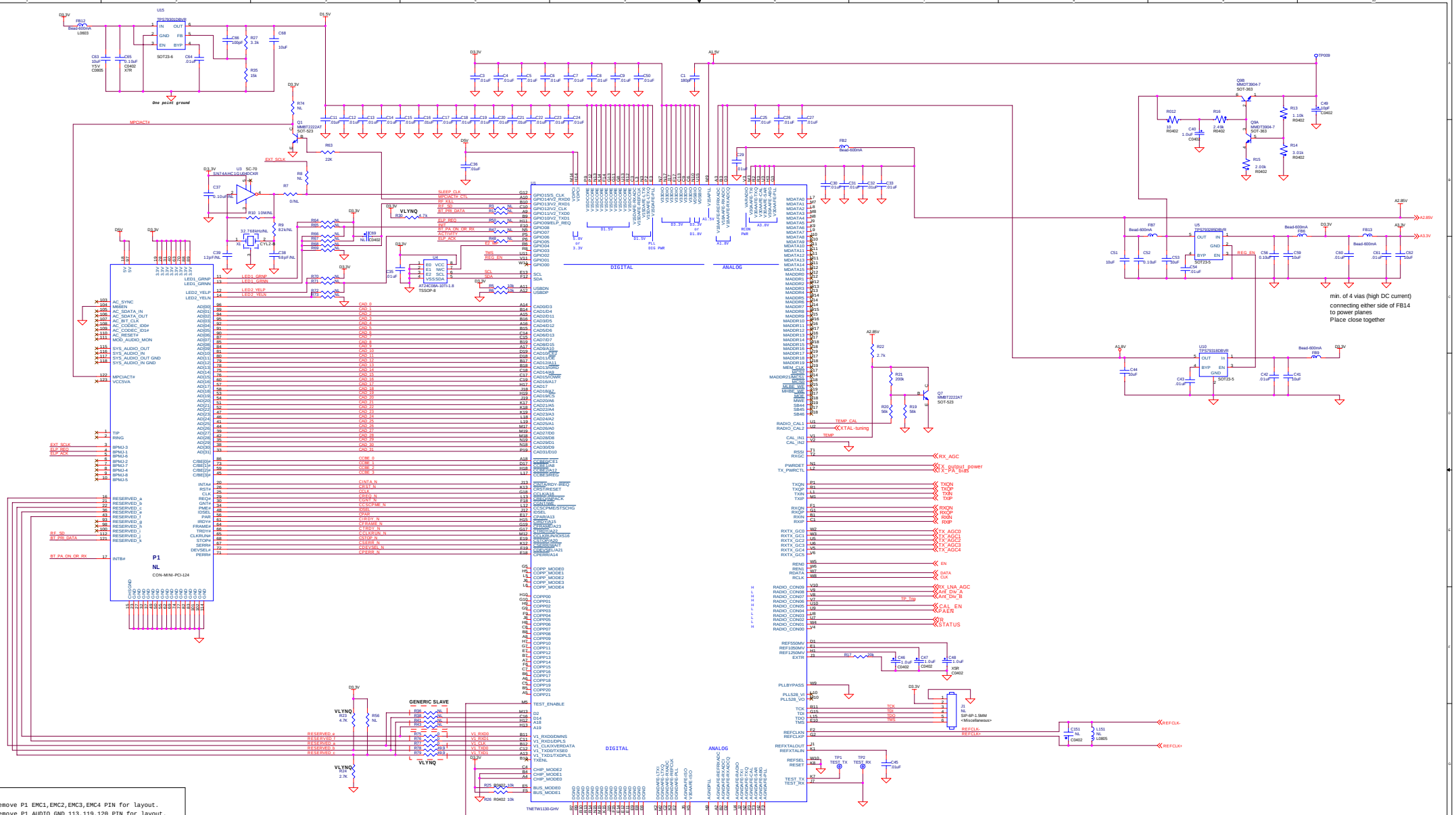

HISTORY

2004/02/08 Remove P1 EMC1,EMC2,EMC3,EMC4 PIN for layout.
2004/02/09 Remove P1 AUDIO_GND 113,119,120 PIN for layout.
2004/02/09 Remove P1 3.3VAUX 24,124 PIN for layout.

LOAD OPTIONS

PART	Minimum Current Consumption		Minimum Cost	
	Load	Do Not Load	Load	Do Not Load
U3	X			X
C37, C38, C39	X			X
R9, R10	X			X
X1	X			X
R7	X			X

PROPRIETARY AND CONFIDENTIAL
COPYRIGHT 72002-2003, TEXAS INSTRUMENTS
NO DUPLICATION, USE, OR DISCLOSURE
WITHOUT PRIOR WRITTEN APPROVAL.

This drawing is controlled via electronic method (not paper).

Filename: Archive File Name
{ArchFileName}

Friday, April 23, 2004

TEXAS INSTRUMENTS INCORPORATED
141 Stony Circle, Suite 130
Santa Rosa, CA 95401
MAIN: (707) 521-3060

TITLE
MP_1130_RADIA_G

Drawn By: G. White

Size	DOCUMENT/DRAWING NUMBER	Rev
D	SCH-000024	F0

Scale	MODEL	Sheet
NA	802.11g Mini PCI	1 of 2

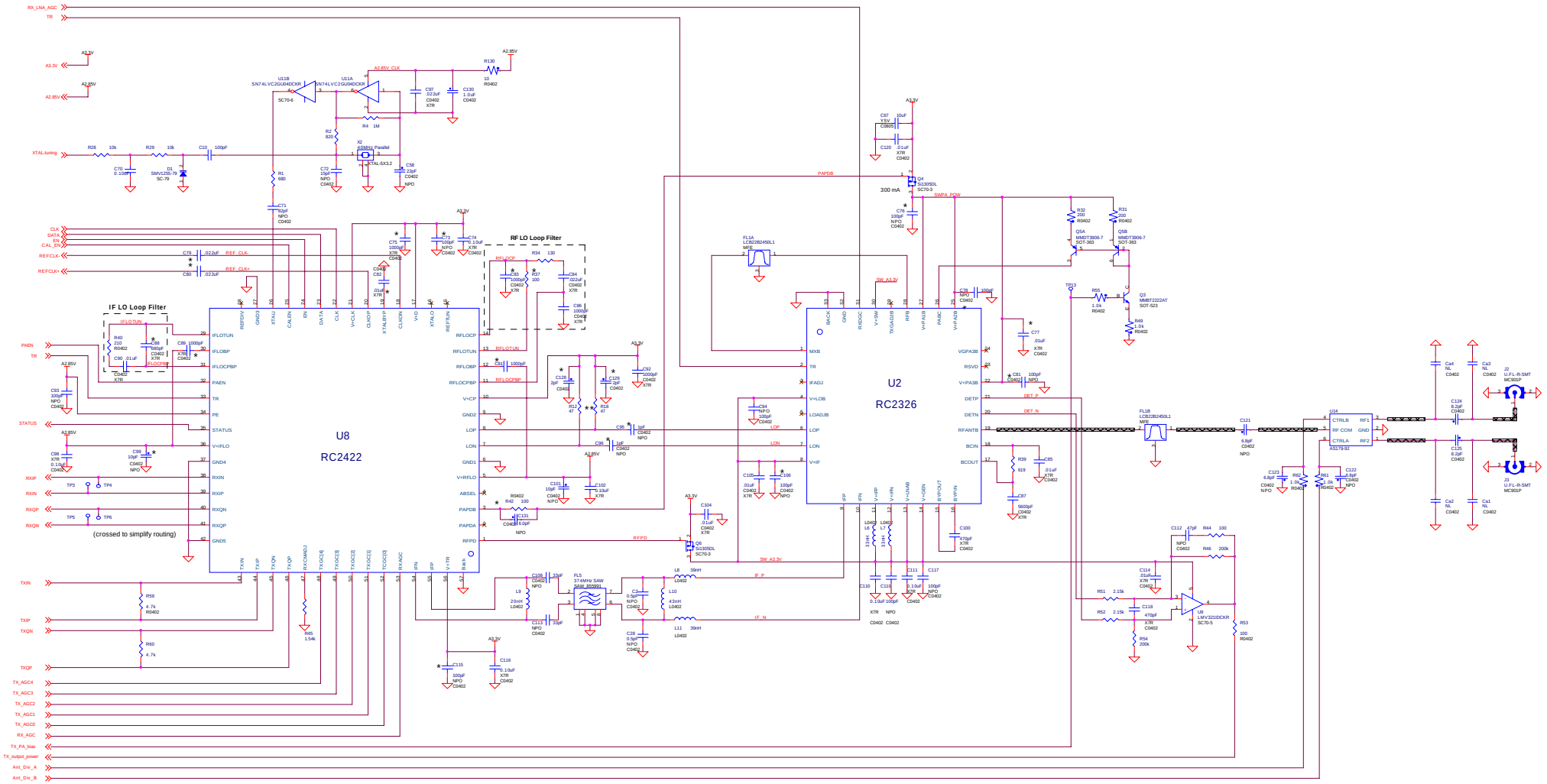

Notes:

1. * = place close to chip

2. The LO lines and the IF lines are to be run as differential pairs. It is recommended that the lines within the pairs be as close as possible and as thin as possible. Note that the LO pair is to have preferential routing over the IF pair. Layout should be symmetric to reduce LO 2nd harmonic radiation.

3. U2 pin 25 draws high current. Insure that the trace width between Q4 & pin 25 is wide enough to minimize the voltage drop due to trace losses.

PCB Stack Up:

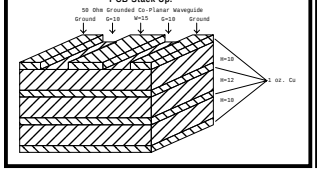

Special Instructions for Radio Routing

1. Keep all RF lines as short as possible
2. Do not route digital control lines near RF lines
3. Keep all RF traces isolated with GND on both sides of the trace whenever possible
4. Clock/LO lines should be embedded to minimize noise coupling

Critical 50 Ohm Transmission Lines

PROPRIETARY AND CONFIDENTIAL
COPYRIGHT 72002-2003, TEXAS INSTRUMENTS
NO DUPLICATION, USE, OR DISCLOSURE
WITHOUT PRIOR WRITTEN APPROVAL.

This drawing is controlled via electronic method (not manually)

Filename: Archive File Name	{ArchFileName}
	Friday, April 23, 2004

TEXAS INSTRUMENTS INCORPORATED
141 Stony Circle, Suite 130
Santa Rosa, CA 95401
MAIN: (707) 521-3060

TITLE: MP_1130_RADIA_G

Drawn By: G. White

Size	DOCUMENT/DRAWING NUMBER	Rev
D	SCH-000024	F0

Scale	MODEL	Sheet
NA	802.11g Mini PCI	2 of 2