WGR615V V2

BOARD ID:052038

CHANGE HISTORY			
DATE	VERSION	DESCRIPTION	PCB Number
03/06/2004	0.1	DRAFT	4900R800

PRELIMINARY

CONFIDENTIAL

SERCOMM CORP.			
Title: WGR615VV2		CHANGE HISTORY	
Size: C	Document Number: 4900R800		Rev: 0.1
Date: 星期二, 二月 22, 2005		Sheet 1 of 13	

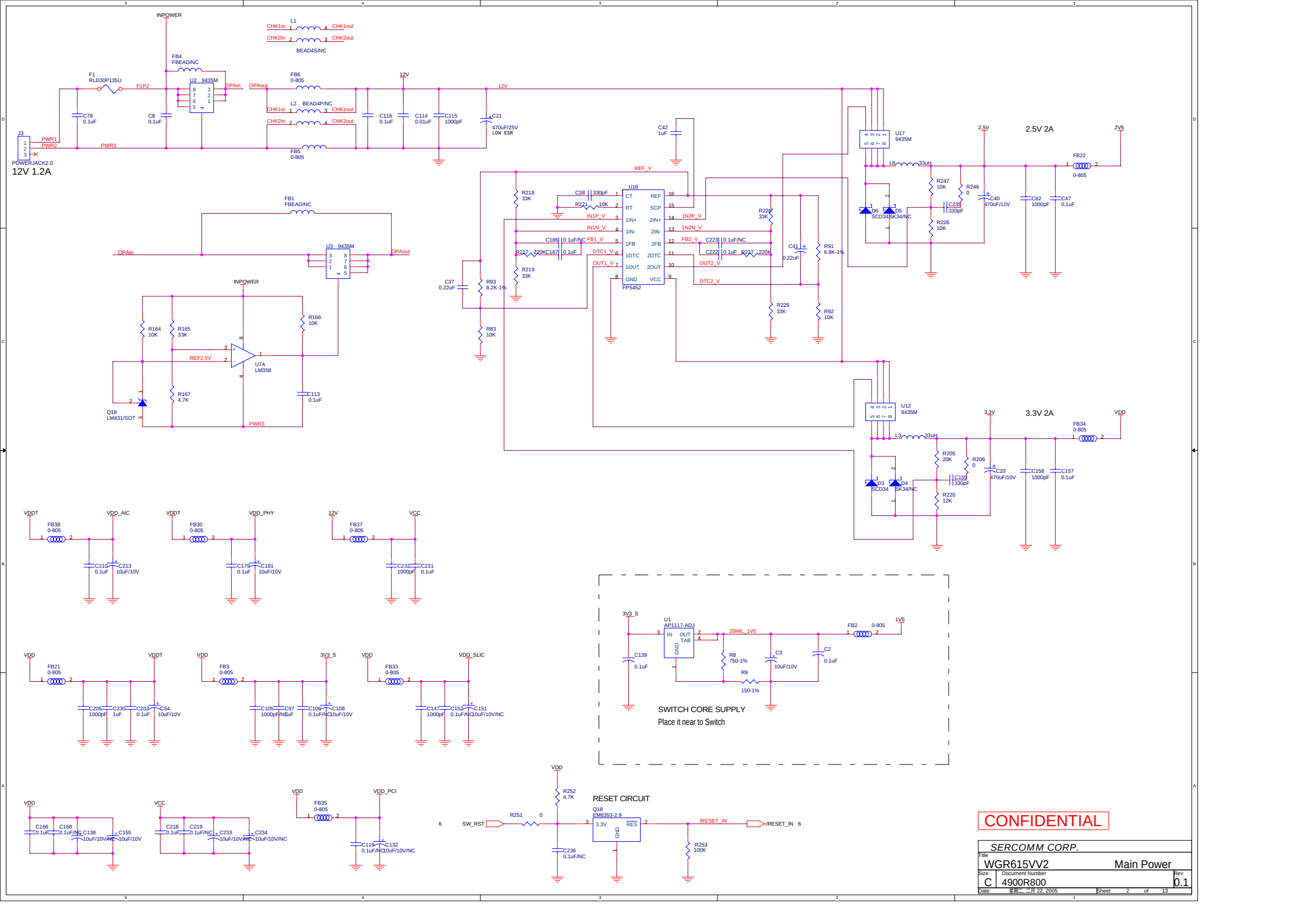
INPOWER
F1
RLD30P135U
F1P2
FB4
FBEAD/NC
U2 9435M
OPAin
OPAout
L1
CHK1in
CHK1out
CHK2in
CHK2out
BEAD4S/NC
FB6
0-805
L2 BEAD4P/NC
FB5
0-805
12V
C78
0.1uF
C8
0.1uF
C116
0.1uF
C114
0.01uF
C115
1000pF
C21
470uF/25V
LOW ESR
J3
PWR1
PWR2
PWR3
POWERJACK2.0
12V 1.2A
FB1
FBEAD/NC
U3 9435M
INPOWER
R164
10K
R165
33K
R166
10K
REF2.5V
U7A
LM358
R167
4.7K
C113
0.1uF
Q19
LM431/SOT
PWR3
REF_V
R218
33K
C38
330pF
R221
10K
U16
CT
RT
1IN+
1IN-
1FB
1DTC
1OUT
GND
REF
SCP
2IN+
2IN-
2FB
2DTC
2OUT
VCC
FP5452
IN1P_V
IN1N_V
FB1_V
DTC1_V
OUT1_V
1N2P_V
1N2N_V
FB2_V
OUT2_V
DTC2_V
C186
0.1uF/NC
R217
220K
C187
0.1uF
R219
33K
C37
0.22uF
R93
8.2K-1%
R83
10K
R228
33K
C223
0.1uF/NC
C222
0.1uF
R227
220K
C41
0.22uF
R91
6.8K-1%
R229
33K
R92
10K
C42
1uF
U17
9435M
L8
33uH
2.5V
2.5V 2A
2V5
R247
10K
R246
0
C235
330pF
R226
10K
D6
SCD34
D5
SK34/NC
C40
470uF/10V
C62
1000pF
C47
0.1uF
FB22
0-805
U12
9435M
L3
33uH
3.3V
3.3V 2A
VDD
R205
20K
R206
0
C159
330pF
R220
12K
D3
SCD34
D4
SK34/NC
C20
470uF/10V
C158
1000pF
C157
0.1uF
FB34
0-805
VDDT
VDD_AIC
FB38
0-805
C210
0.1uF
C213
10uF/10V
VDDT
VDD_PHY
FB30
0-805
C179
0.1uF
C181
10uF/10V
12V
VCC
FB37
0-805
C232
1000pF
C231
0.1uF
VDD
VDDT
FB21
0-805
C205
1000pF
C230
1uF
C202
0.1uF
C54
10uF/10V
VDD
3V3_S
FB3
0-805
C105
1000pF/NC
C97
1uF
C106
0.1uF/NC
C108
10uF/10V
VDD
VDD_SLIC
FB33
0-805
C147
1000pF
C152
0.1uF/NC
C151
10uF/10V/NC
3V3_S
U1
AP1117-ADJ
IN
OUT
TAB
GND
C139
0.1uF
20MIL_1V5
R8
750-1%
R9
150-1%
C3
10uF/10V
C2
0.1uF
FB2
0-805
1V5
SWITCH CORE SUPPLY
Place it near to Switch
VDD
C166
0.1uF
C168
0.1uF/NC
C138
10uF/10V/NC
C155
10uF/10V
VCC
C218
0.1uF
C219
0.1uF/NC
C233
10uF/10V/NC
C234
10uF/10V/NC
VDD
VDD_PCI
FB35
0-805
C119
0.1uF/NC
C132
10uF/10V/NC
RESET CIRCUIT
VDD
R252
4.7K
SW_RST
R251
0
Q18
EM6353-2.9
3.3V
RES
GND
C236
0.1uF/NC
R253
100K
/RESET_IN
/RESET_IN 6
CONFIDENTIAL
SERCOMM CORP.
Title
WGR615VV2
Main Power
Size
C
Document Number
4900R800
Rev
0.1
Date:
星期二, 二月 22, 2005
Sheet
2
of
13

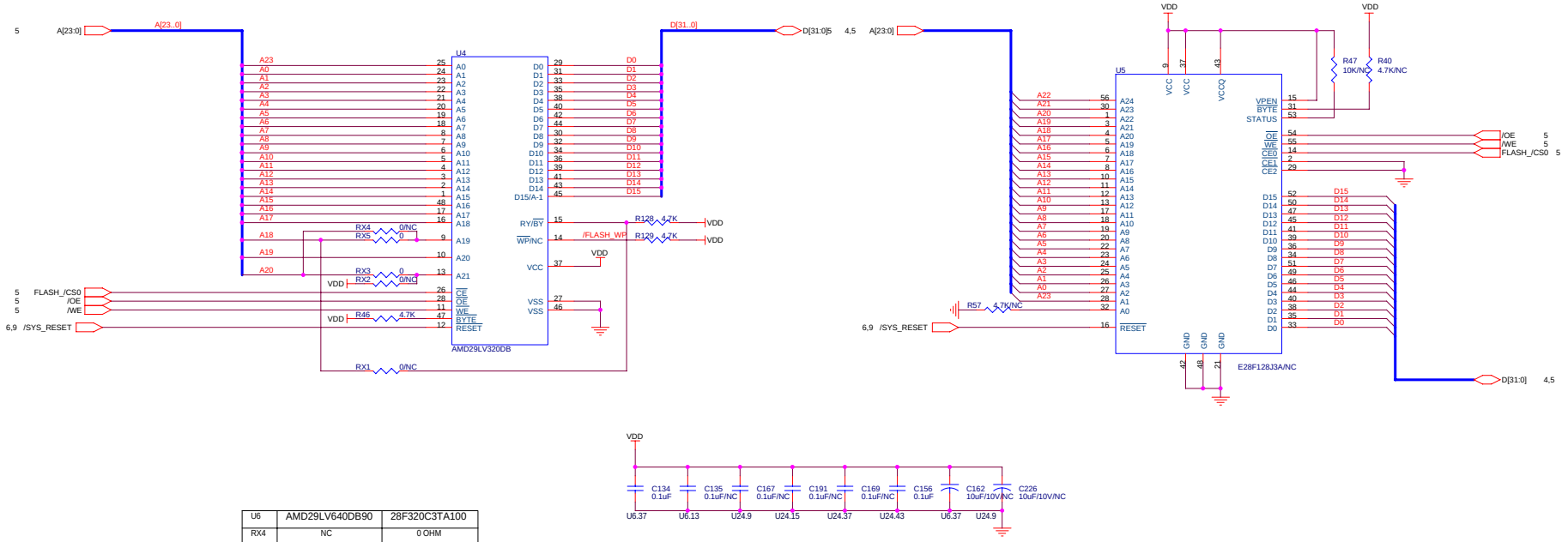

U6	AMD29LV640DB90	28F320C3TA100
RX4	NC	0 OHM
RX5	0 OHM	NC
RX3	0 OHM	NC
RX2	NC	0 OHM
RX1	NC	0 OHM
R46	4.7K OHM	0 OHM
R128	4.7K OHM	NC

PRELIMINARY

CONFIDENTIAL

SERCOMM CORP.

Title: WGR615V V2 FLASH

Size: C | Document Number: 4900R800 | Rev: 0.1

Date: 星期二, 二月 22, 2005 | Sheet 3 of 13

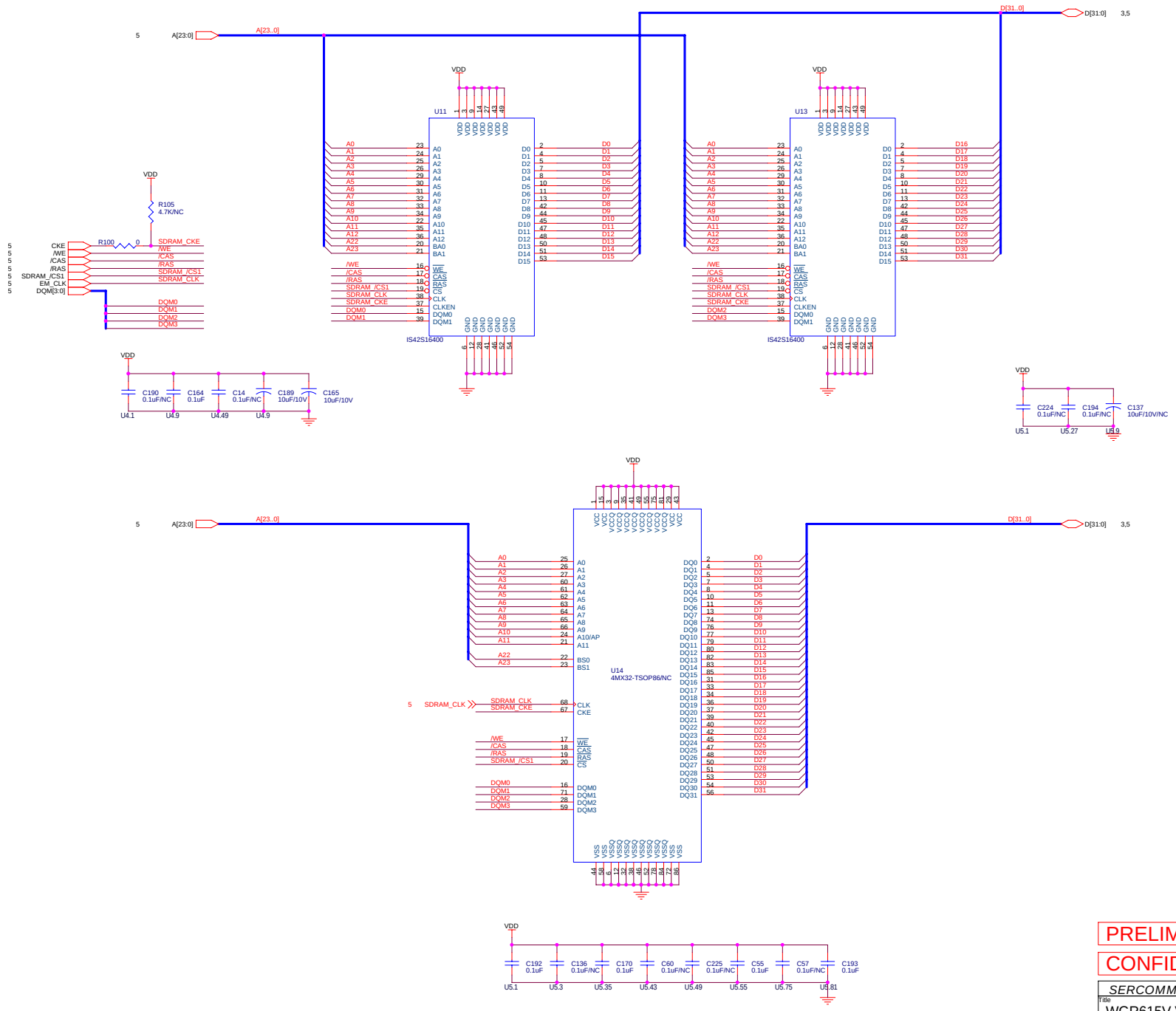

PRELIMINARY

CONFIDENTIAL

SERCOMM CORP.

Title	WGR615V V2	SDRAM
Size: C	Document Number: 4900R800	Rev: 0.1
Date: 星期二, 二月 22, 2005	Sheet 4 of 13	

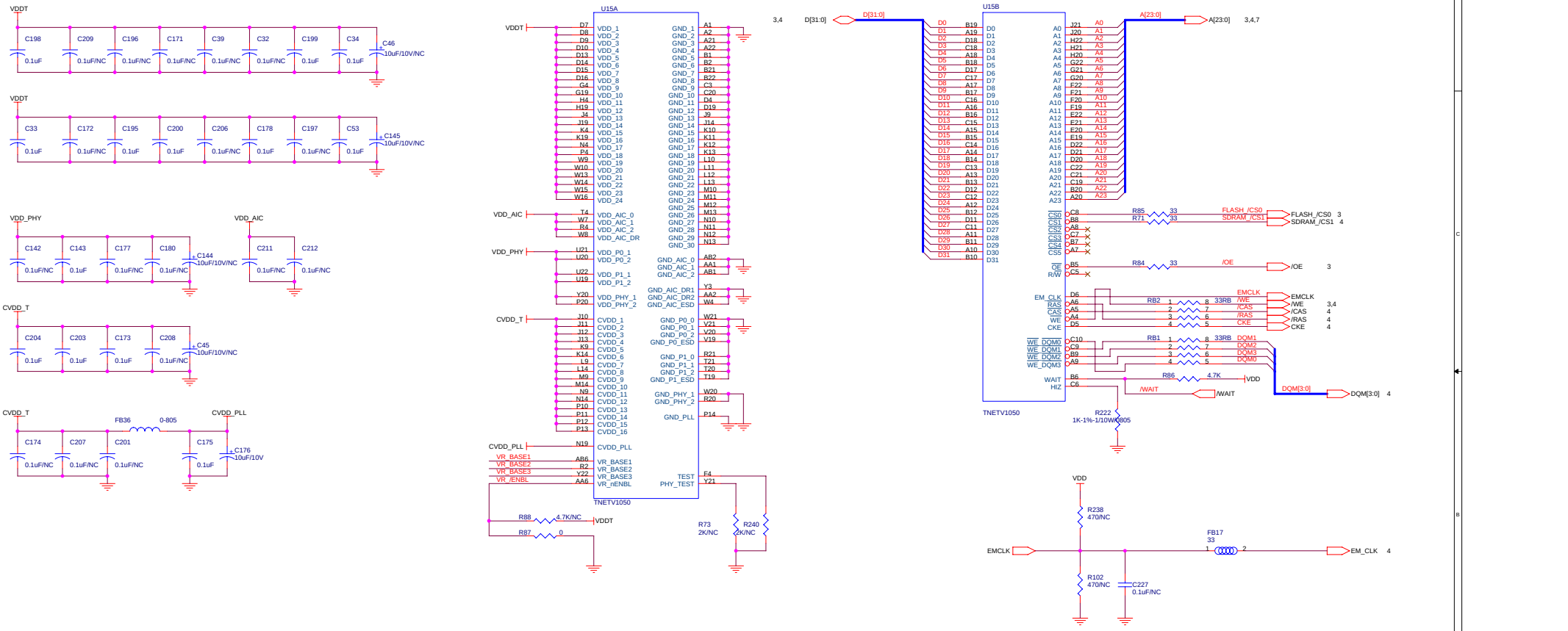

CONFIDENTIAL

SERCOMM CORP.		
Title: WGR615V V2		TNETV1060 A B
Size: C	Document Number: 4900R800	Rev: 0.1
Date: 星期二, 二月 22, 2005	Sheet 5 of 13	

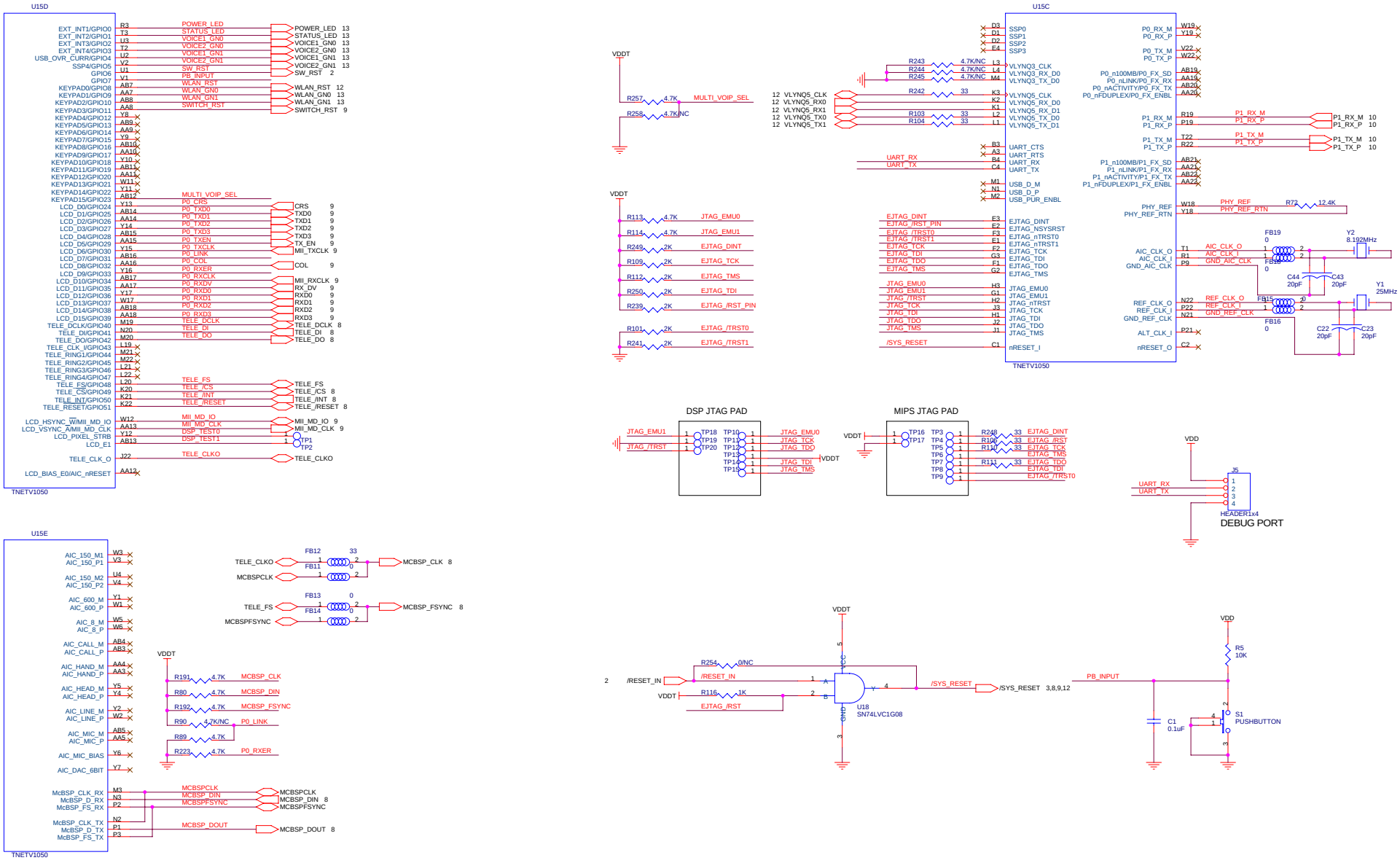
U15D
TNETV1050
U15C
TNETV1050
DSP JTAG PAD
MIPS JTAG PAD
DEBUG PORT
HEADER1x4
U15E
TNETV1050
U18
SN74LVC1G08
PUSHBUTTON
CONFIDENTIAL
SERCOMM CORP.
WGR615V V2
TNETV1060 C D E
4900R800
0.1
Date: 星期二, 二月 22, 2005
Sheet 6 of 13

BOOT CONFIGURATION OPTIONS

A[23:0] A[23..0]

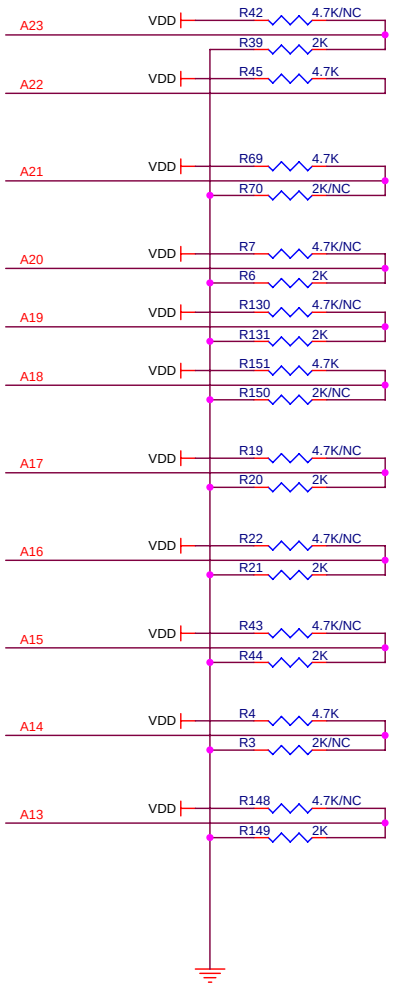

A23,A22 - FLASH WIDTH for CS0
11 - 32bit FLASH (default)
01 - 16bit FLASH

A21 - Endian Mode
1 - Big Endian (default)
0 - Little Endian

A20, A19, A18 - Boot Memory Location
111 - VLYNQ
110 - Serial EEPROM via SSP
101 - PLD_/CS5 (not valid)
100 - FLASH_/CS4
011 - SRAM_/CS3
010 - SDRAM_/CS1
001 - FLASH_/CS0 (default)
000 - Boot from internal 4K ROM

A17 -PLL Mode
1 - Bypass PLL (test mode)
0 - Use PLL (default)

A16 - Watch Dog Mode
1 - Watch Dog always Disabled
0 - Watch Dog may be Enabled
(default)

A15 - Watch Dog Write Protect
1 - Watch Dog is write protected
0 - Watch Dog TIMER_ENABLE
bit is active (default)

A14 - SDRAM Clock Mode
1 - SDRAM runs at full speed (default)
0 - SDRAM runs at half speed

A13 - SDRAM Initialization Mode
1 - Reduced SDRAM Initialization (test mode)
0 - Normal SDRAM Initialization (default)

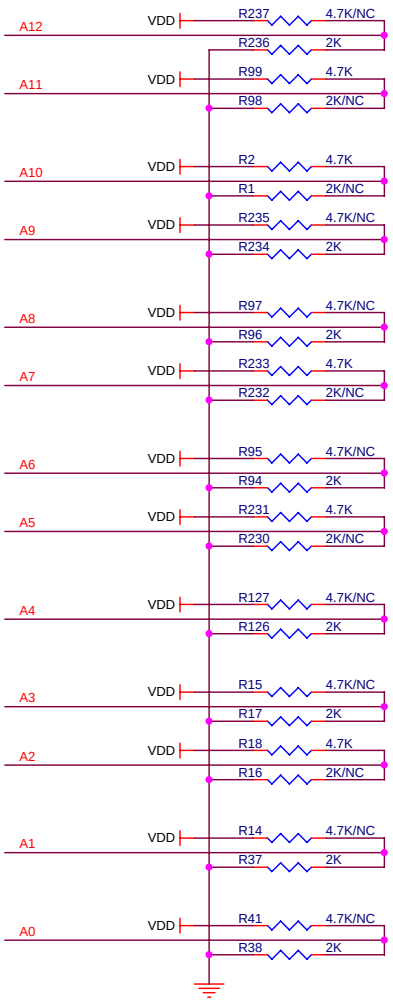

A12,A11 - VBUSP Clock Input Mux Select
11 - Internal MIPS PLL clock output
10 - Alternate Clock I/O
01 - Reference Clock I/O (default)
00 - AIC 20 Clock I/O

A10,A9 - USB Clock Input Mux Select
11 - Internal MIPS PLL clock output
10 - Alternate Clock I/O (default)
01 - Reference Clock I/O
00 - AIC 20 Clock I/O

A8,A7 - Ethernet PHY Clock Input Mux Select
11 - Internal MIPS PLL clock output
10 - Alternate Clock I/O
01 - Reference Clock I/O (default)
00 - AIC 20 Clock I/O

A6,A5 - DSP Clock Input Mux Select
11 - Internal MIPS PLL clock output
10 - Alternate Clock I/O
01 - Reference Clock I/O (default)
00 - AIC 20 Clock I/O

A4 - USB Mode
1 - HOST
0 - Device
(default)

A3,A2 - MIPS Clock Input Mux Select
11 - Internal MIPS PLL clock output
10 - Alternate Clock I/O
01 - Reference Clock I/O (default)
00 - AIC 20 Clock I/O

A1 - MIPS Clock Mode
1 - MIPS_CLK is asynchronous
0 - MIPS_CLK is synchronous
(default)

A0 - Default Control
1 - Boot Config is default
0 - Boot Config is
defined by A23:A0
(default)

PRELIMINARY

CONFIDENTIAL

SERCOMM CORP.

Title	WGR615V V2	BOOT CFG
Size	Document Number	Rev
B	4900R800	0.1
Date: 星期二, 二月 22, 2005	Sheet 7 of 13	

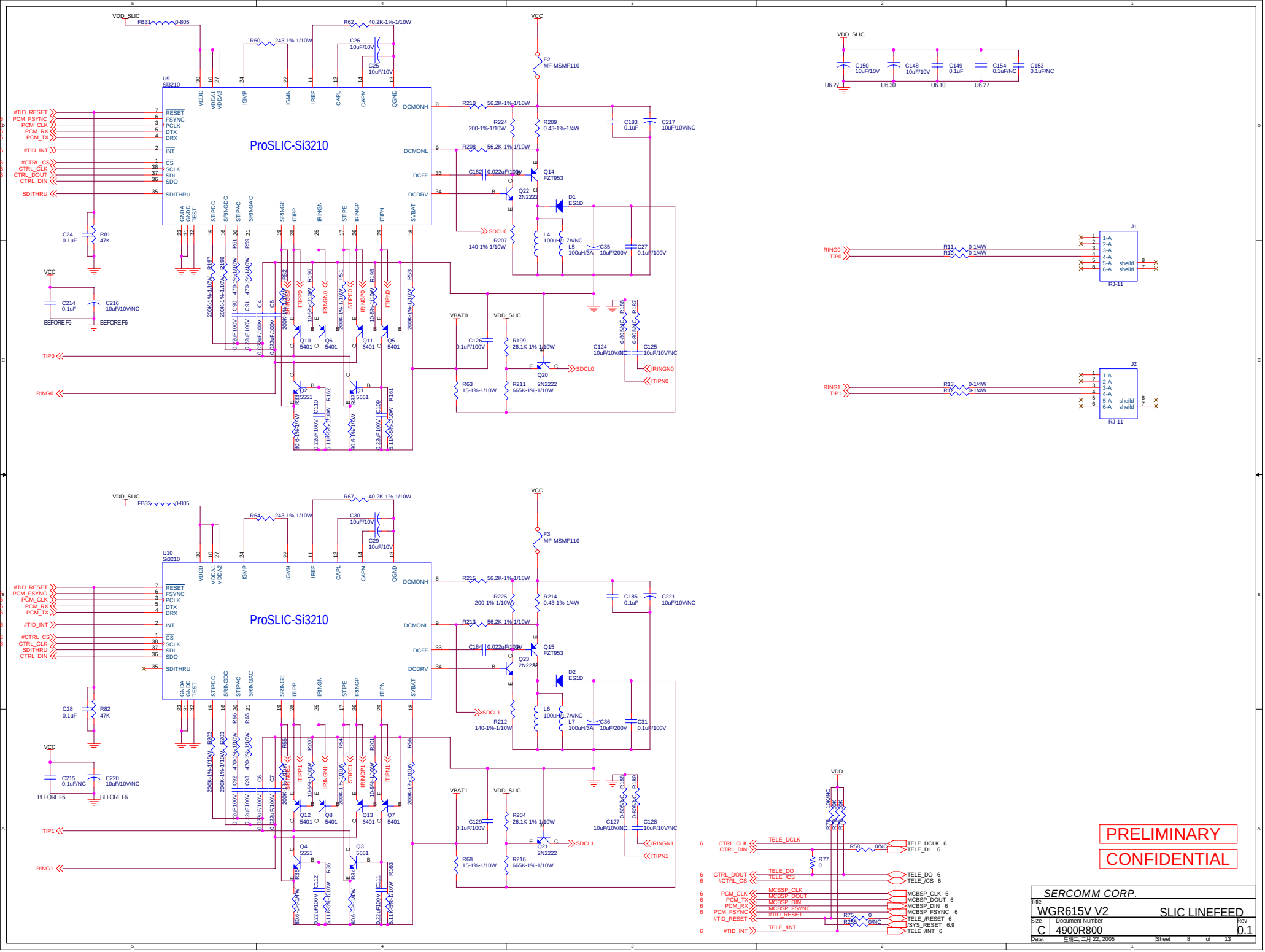
ProSLIC-Si3210
U9
Si3210
U10
Si3210
VDD_SLIC
VCC
VBAT0
VBAT1
VDD
F2
MF-MSMF110
F3
MF-MSMF110
Q14
FZT953
Q15
FZT953
Q20
2N2222
Q21
2N2222
Q22
2N2222
Q23
2N2222
D1
ES1D
D2
ES1D
J1
J2
RJ-11
RING0
TIP0
RING1
TIP1
#TID_RESET
PCM_FSYNC
PCM_CLK
PCM_RX
PCM_TX
#TID_INT
#CTRL_CS
CTRL_CLK
CTRL_DOUT
CTRL_DIN
SDITHRU
SDCL0
SDCL1
IRINGN0
ITIPN0
IRINGN1
ITIPN1
TELE_DCLK
TELE_DI
TELE_DO
TELE_/CS
MCBSP_CLK
MCBSP_DOUT
MCBSP_DIN
MCBSP_FSYNC
TELE_/RESET
/SYS_RESET
TELE_/INT
PRELIMINARY
CONFIDENTIAL
SERCOMM CORP.
Title
WGR615V V2
SLIC LINEFEED
Size
C
Document Number
4900R800
Rev
0.1
Date:
Sheet 8 of 13

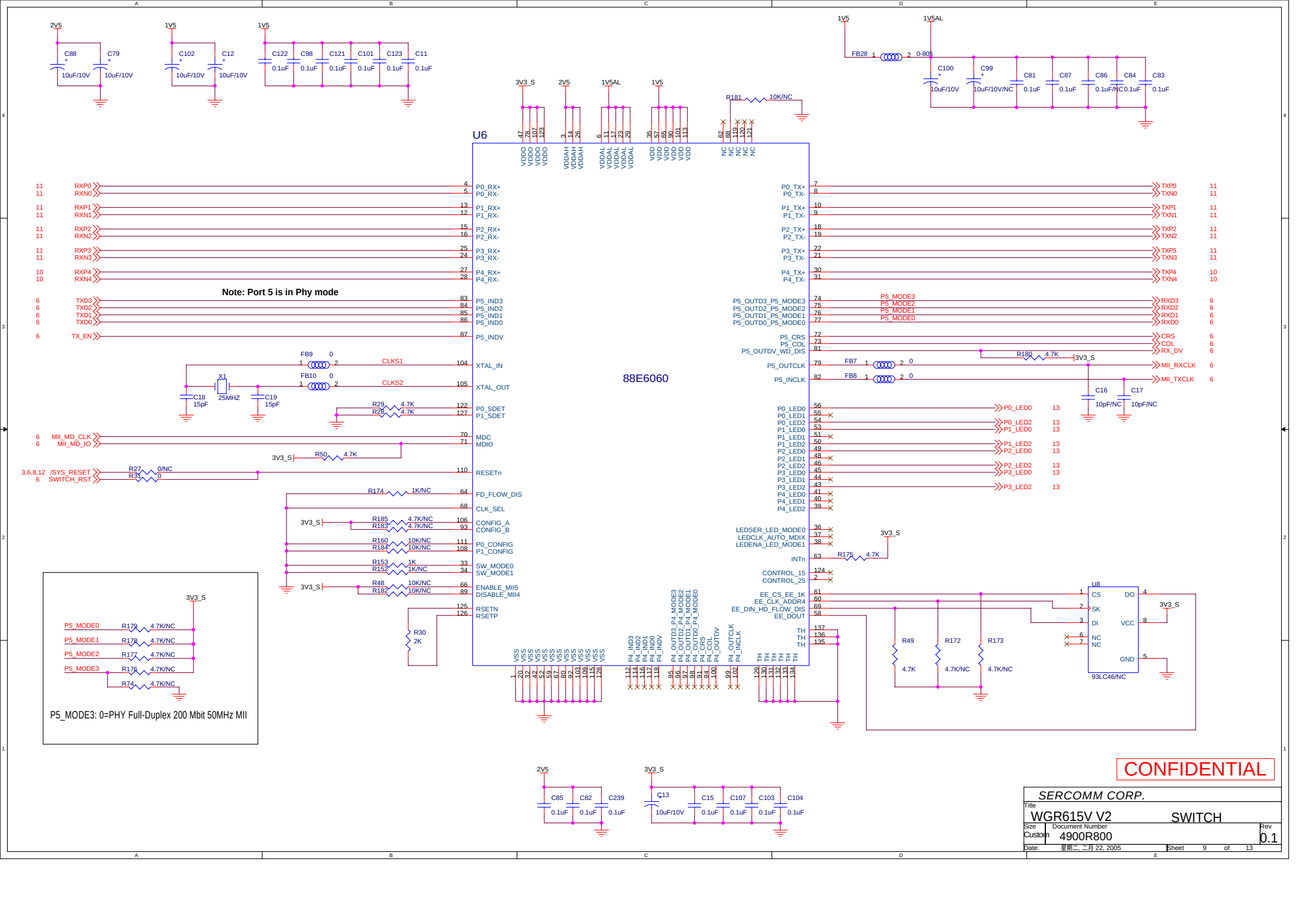
U6
88E6060
Note: Port 5 is in Phy mode
P5_MODE3: 0=PHY Full-Duplex 200 Mbit 50MHz MII
CONFIDENTIAL
SERCOMM CORP.
WGR615V V2
SWITCH
Size Custom
Document Number 4900R800
Rev 0.1
Date: 星期二, 二月 22, 2005
Sheet 9 of 13

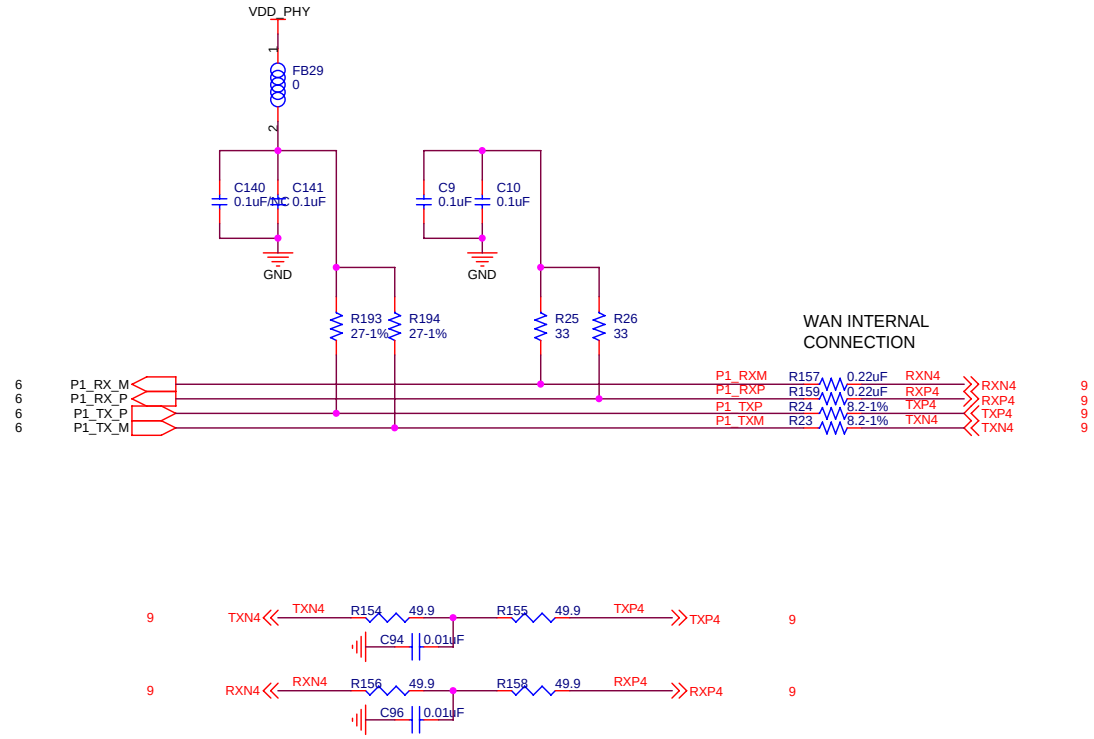

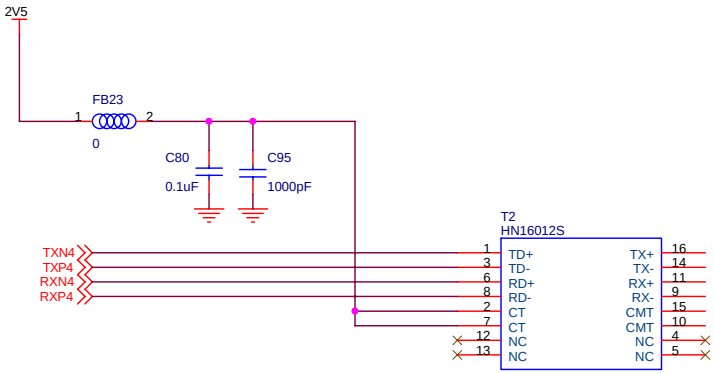

PRELIMINARY

CONFIDENTIAL

SERCOMM CORP.		
Title: WGR615V V2		WAN I/F
Size: B	Document Number: 4900R800	Rev: 0.1
Date: 星期二, 二月 22, 2005	Sheet 10 of 13	

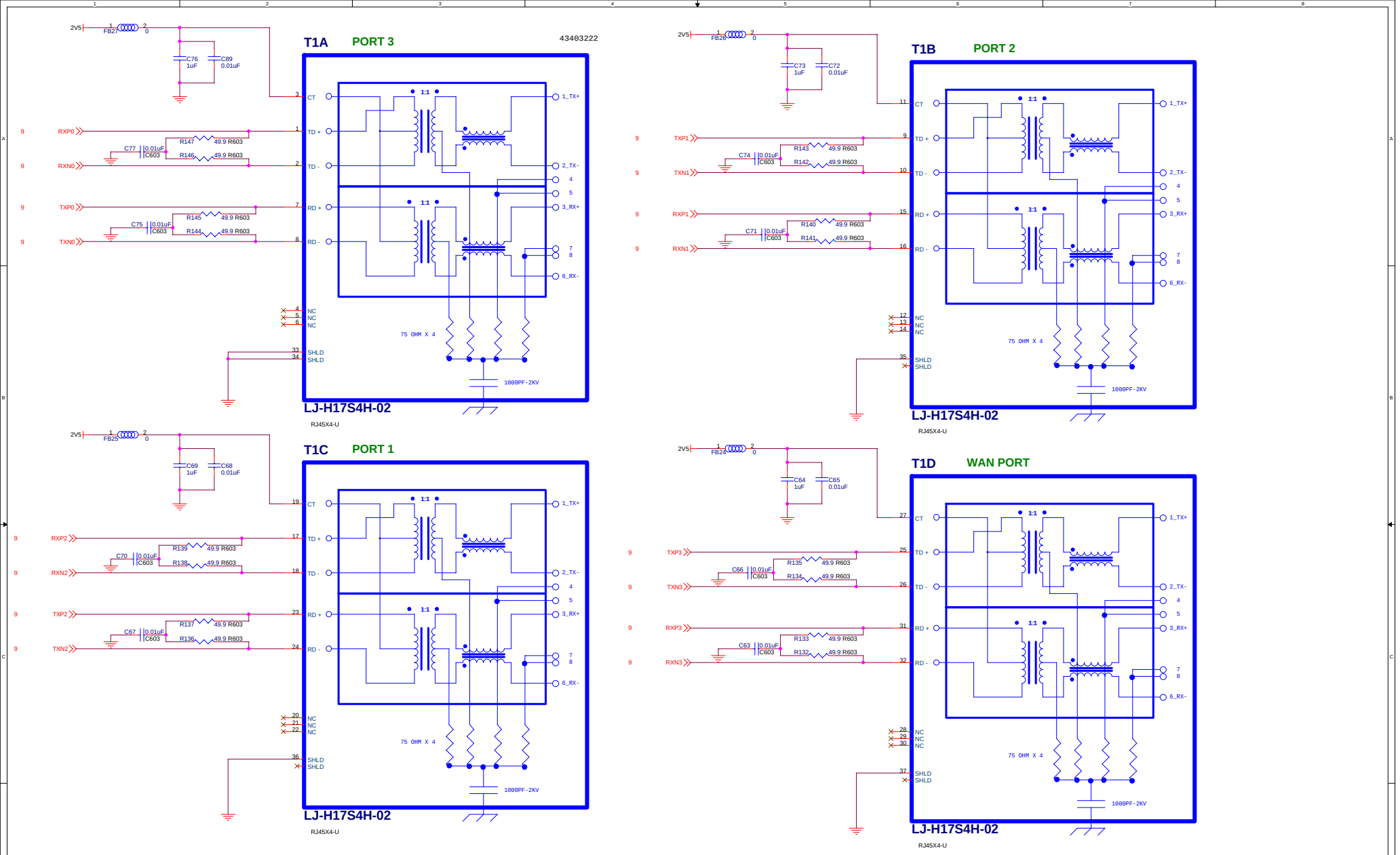

CONFIDENTIAL

SERCOMM CORP.

Title: WGR615V V2 LAN I/F

Size: C | Document Number: 4900R800 | Rev: 1.0

Date: 星期二, 二月 22, 2005 | Sheet 11 of 13

VLYNQ CONNECTOR

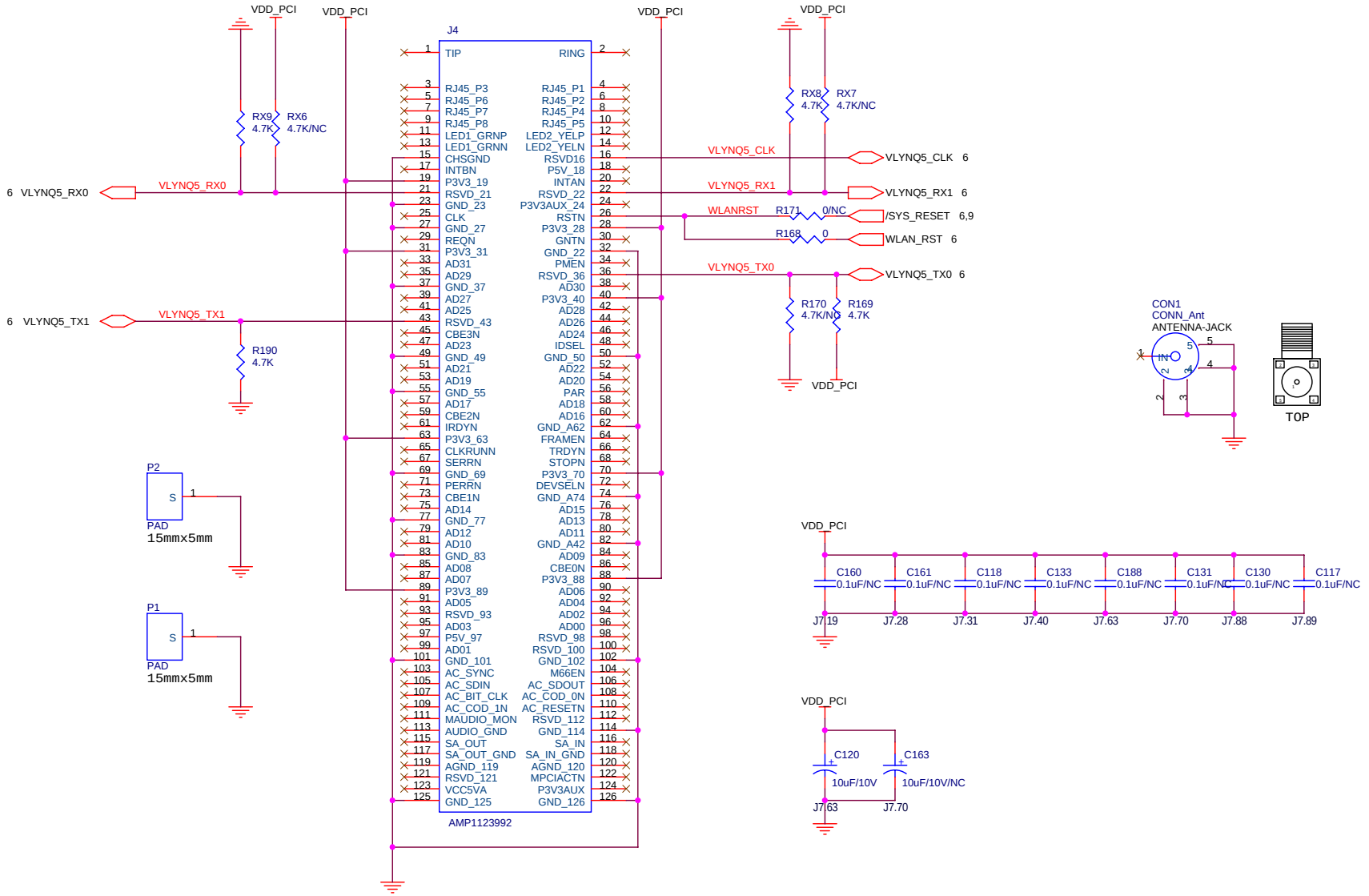

PRELIMINARY

CONFIDENTIAL

SERCOMM CORP.		
Title: WGR615V V2 VLYNQ CONNECTOR		
Size: B	Document Number: 4900R800	Rev: 0.1
Date: 星期二, 二月 22, 2005	Sheet 12 of 13	

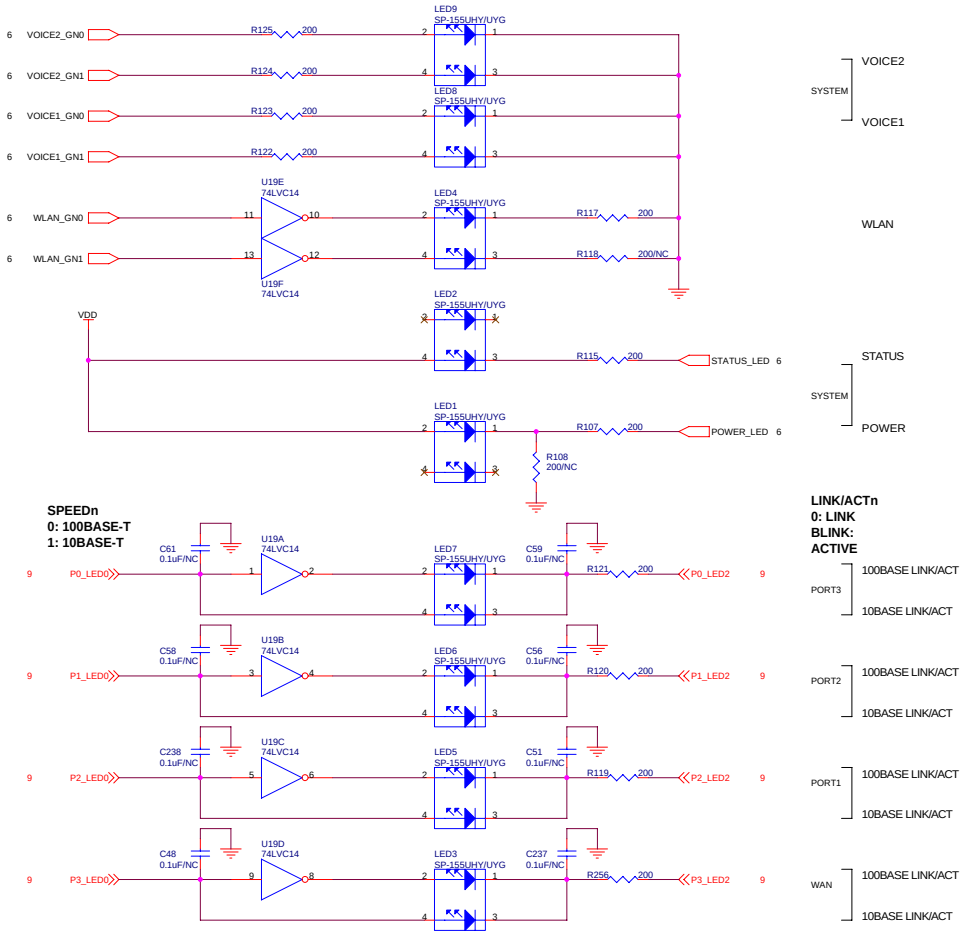

SYSTEM: VOICE2, VOICE1

WLAN

SYSTEM: STATUS, POWER

SPEEDn
0: 100BASE-T
1: 10BASE-T

LINK/ACTn
0: LINK
BLINK:
ACTIVE

PORT3: 100BASE LINK/ACT, 10BASE LINK/ACT

PORT2: 100BASE LINK/ACT, 10BASE LINK/ACT

PORT1: 100BASE LINK/ACT, 10BASE LINK/ACT

WAN: 100BASE LINK/ACT, 10BASE LINK/ACT

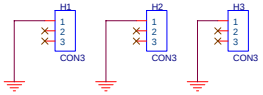

PRELIMINARY

CONFIDENTIAL

SERCOMM CORP.

Title	WGR615V V2	SYSTEM LEDS
Size: C	Document Number: 4900R800	Rev: 0.1
Date: 星期二, 二月 22, 2005	Sheet 13 of 13	