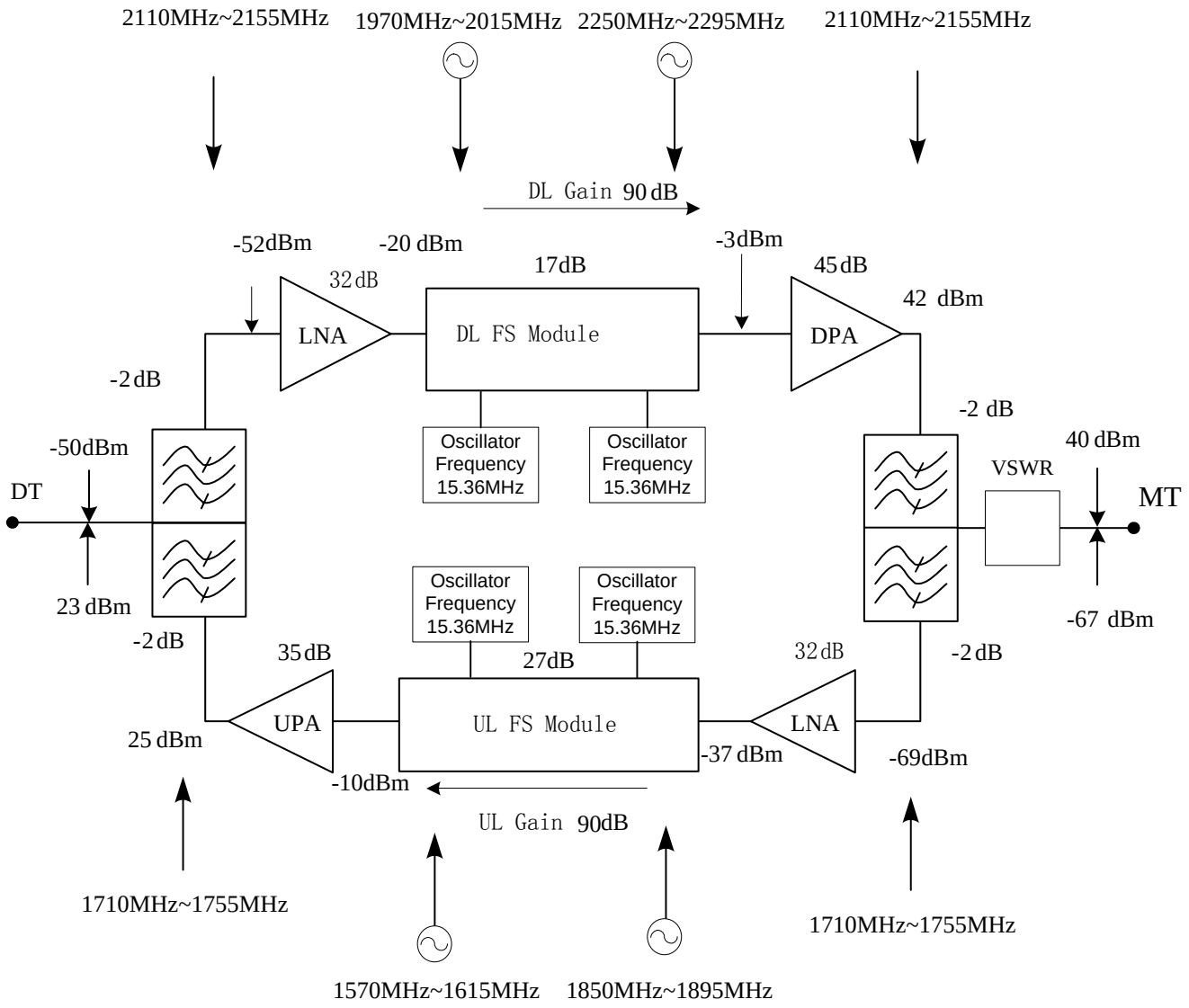

RD-2020(20W) System Gain Allocation