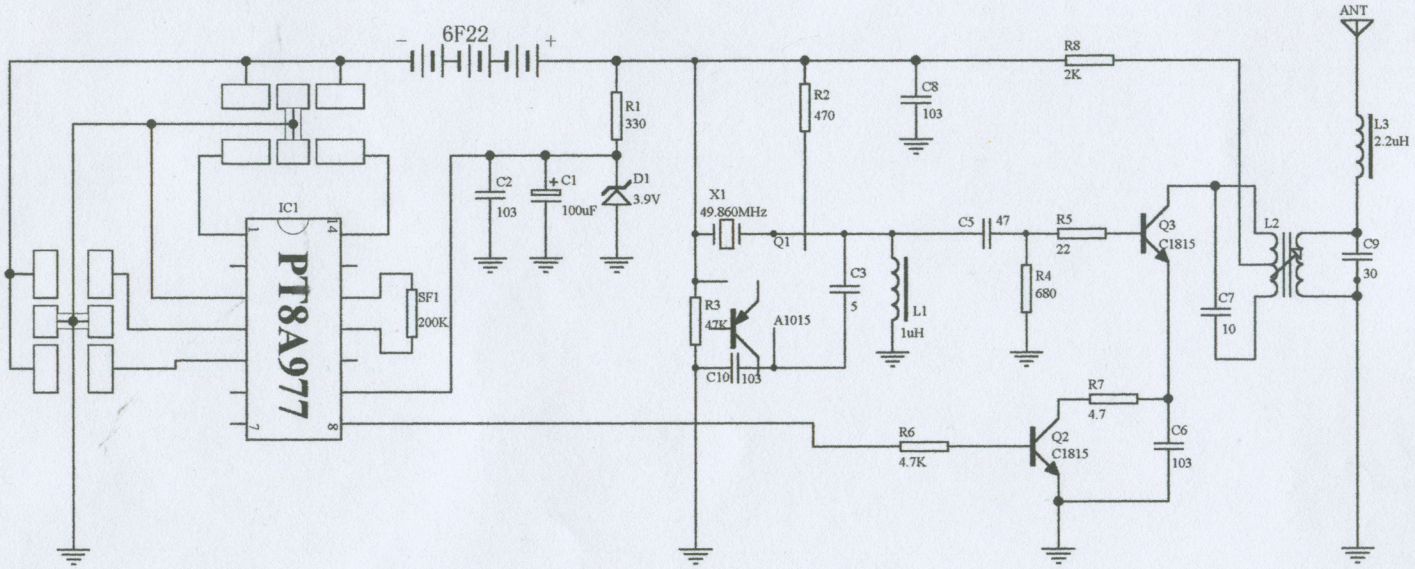

Title	MEISIDA ELECTRONIC TOYS CO.,LTD.	
Size A4	Number MSD2001 TX 49mHz	Revision
Date: 14-May-2003		Sheet of
File: E:\DDY\SCH\2001T49.SCH		Drawn By: