FCC, IC and ICT Label

300mm(W)× 219mm(H)× 40mm(D)

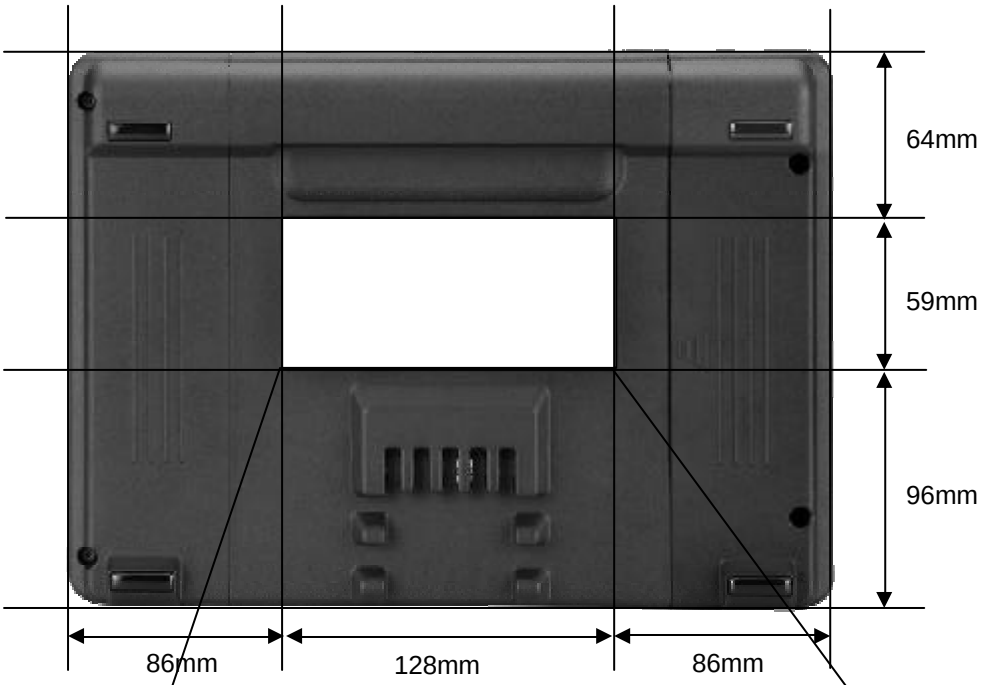

Worldpicom Corporation

Model: WP-D701

S/No XyymXXXX****

JAPAN VIETNAM RESTAURANT JOINT STOCK COMPANY CODE: A0728310817AE01A2

ICT

001WWCA1305

2.4 DS/OF 4

X00000

XXXX00XX0000X0

FCC ID: PRTJD712 *CAN ICES-3(B)/NMB-3(B)* IC: 10528A-JD712

This device complies with part 15 of the FCC Rules. Operation is subject to the following two conditions: (1) This device may not cause harmful interference, and (2) this device must accept any interference received, including interference that may cause undesired operation.

MADE IN CHINA

59mm

128mm