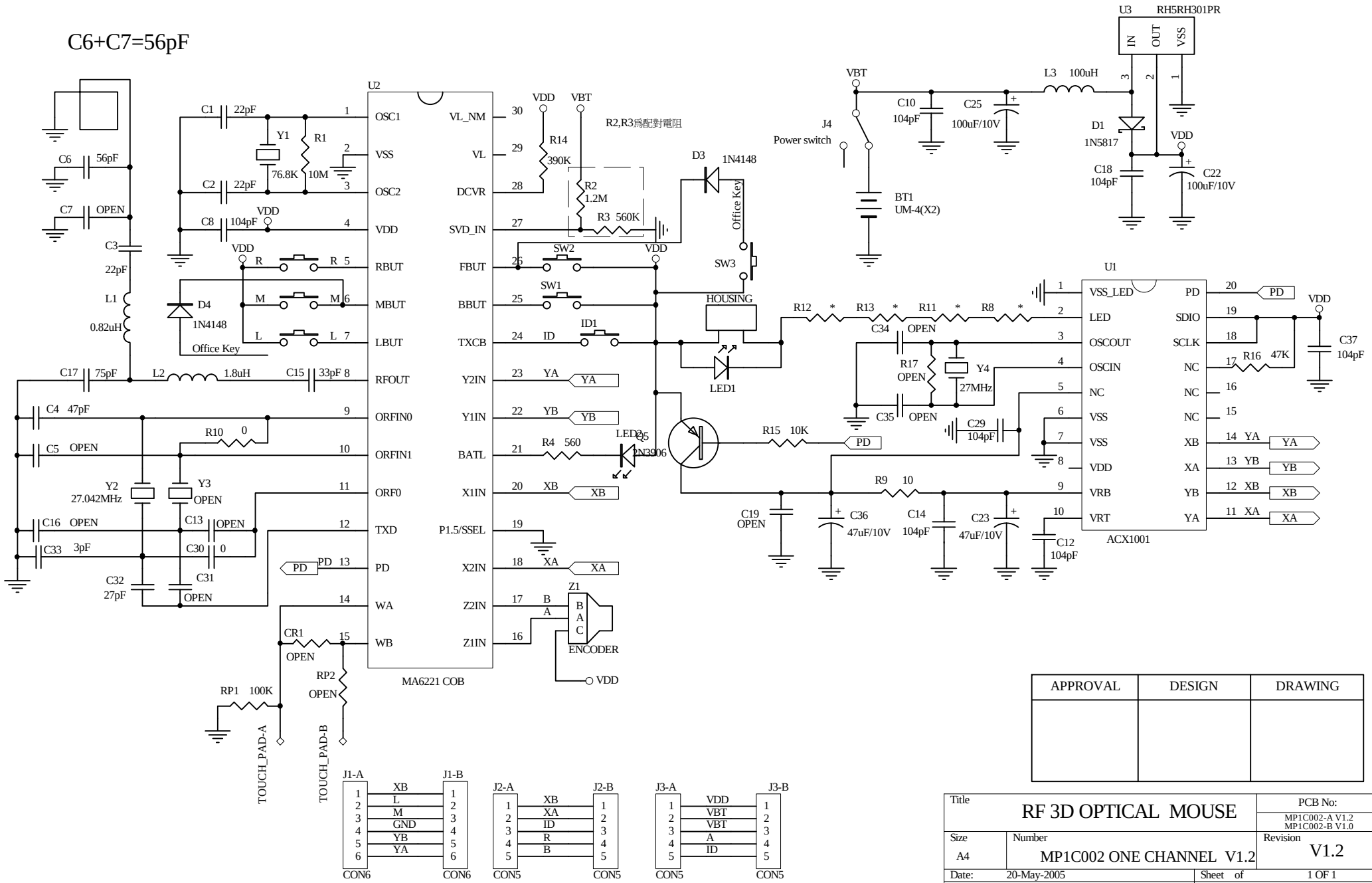

APPROVAL	DESIGN	DRAWING

Title: RF 3D OPTICAL MOUSE		PCB No: MP1C002-A V1.2 MP1C002-B V1.0
Size: A4	Number: MP1C002 ONE CHANNEL V1.2	Revision: V1.2
Date: 20-May-2005		Sheet of 1 OF 1
File: D:\程曉梅\LASER.ddb		Drawn By: