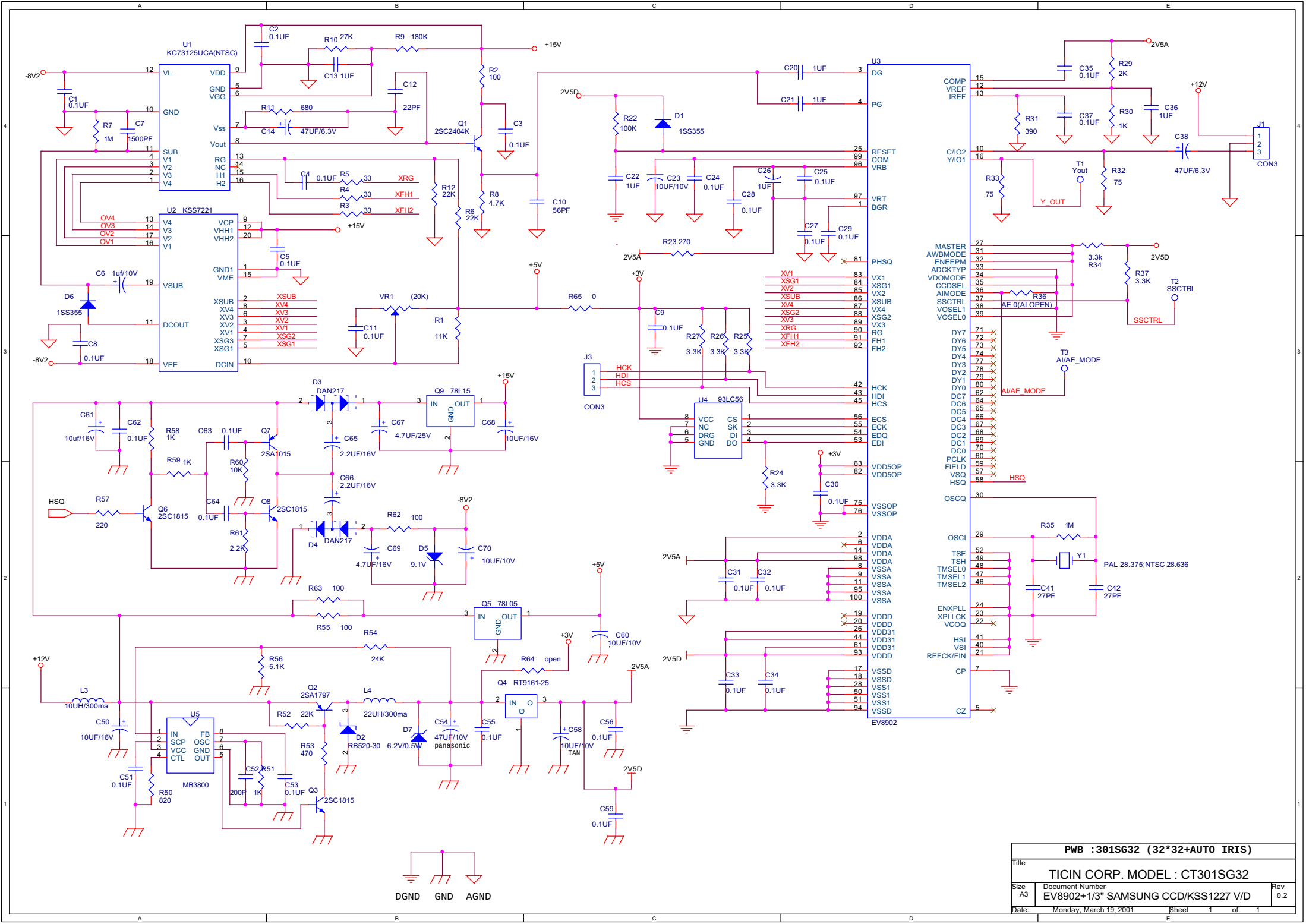

PWB :301SG32 (32*32+AUTO IRIS)

Title: TICIN CORP. MODEL : CT301SG32

Size: A3 | Document Number: EV8902+1/3" SAMSUNG CCD/KSS1227 V/D | Rev: 0.2

Date: Monday, March 19, 2001 | Sheet 1 of 1