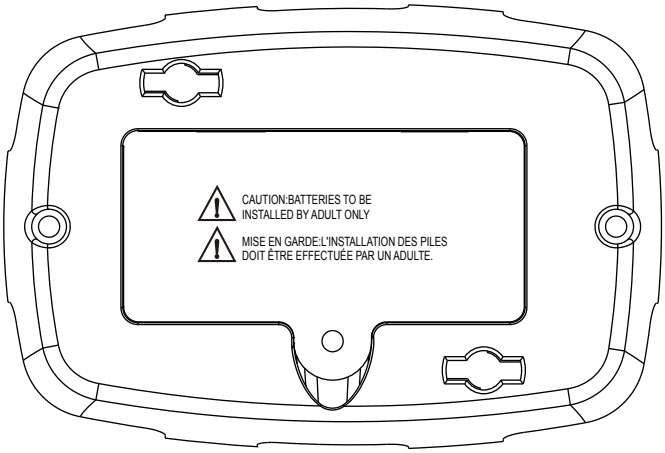
CAUTION:BATTERIES TO BE
INSTALLED BY ADULT ONLY
MISE EN GARDE:L'INSTALLATION DES PILES
DOIT ÊTRE EFFECTUÉE PAR UN ADULTE.

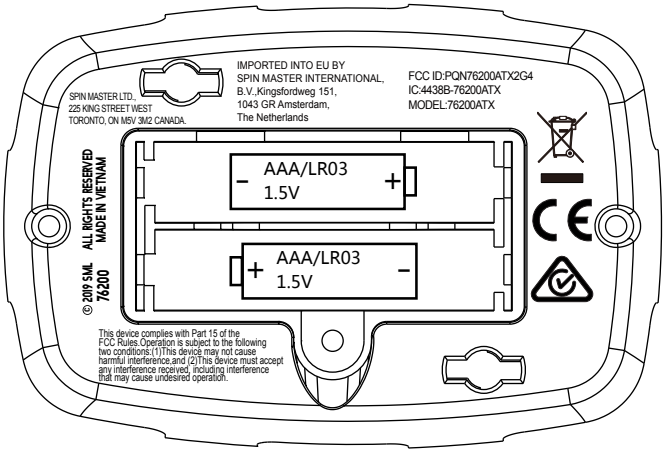
SPIN MASTER LTD.,
225 KING STREET WEST
TORONTO, ON M5V 3M2 CANADA.
IMPORTED INTO EU BY
SPIN MASTER INTERNATIONAL,
B.V.,Kingsfordweg 151,
1043 GR Amsterdam,
The Netherlands
FCC ID:PQN76200ATX2G4
IC:4438B-76200ATX
MODEL:76200ATX
AAA/LR03
1.5V
AAA/LR03
1.5V
© 2019 SML ALL RIGHTS RESERVED
76200 MADE IN VIETNAM
This device complies with Part 15 of the
FCC Rules.Operation is subject to the following
two conditions:(1)This device may not cause
harmful interference,and (2)This device must accept
any interference received, including interference
that may cause undesired operation.