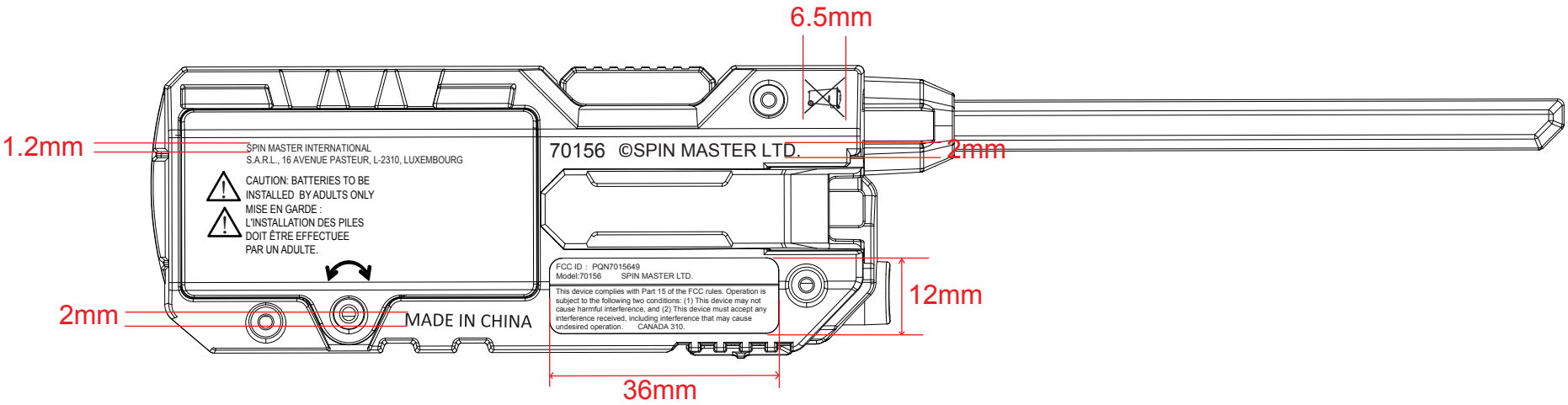
6.5mm
1.2mm
SPIN MASTER INTERNATIONAL
S.A.R.L., 16 AVENUE PASTEUR, L-2310, LUXEMBOURG
CAUTION: BATTERIES TO BE
INSTALLED BY ADULTS ONLY
MISE EN GARDE :
L'INSTALLATION DES PILES
DOIT ÊTRE EFFECTUEE
PAR UN ADULTE.
70156 ©SPIN MASTER LTD.
2mm
FCC ID : PQN7015649
Model:70156 SPIN MASTER LTD.
This device complies with Part 15 of the FCC rules. Operation is subject to the following two conditions: (1) This device may not cause harmful interference, and (2) This device must accept any interference received, including interference that may cause undesired operation. CANADA 310.
12mm
2mm
MADE IN CHINA
36mm

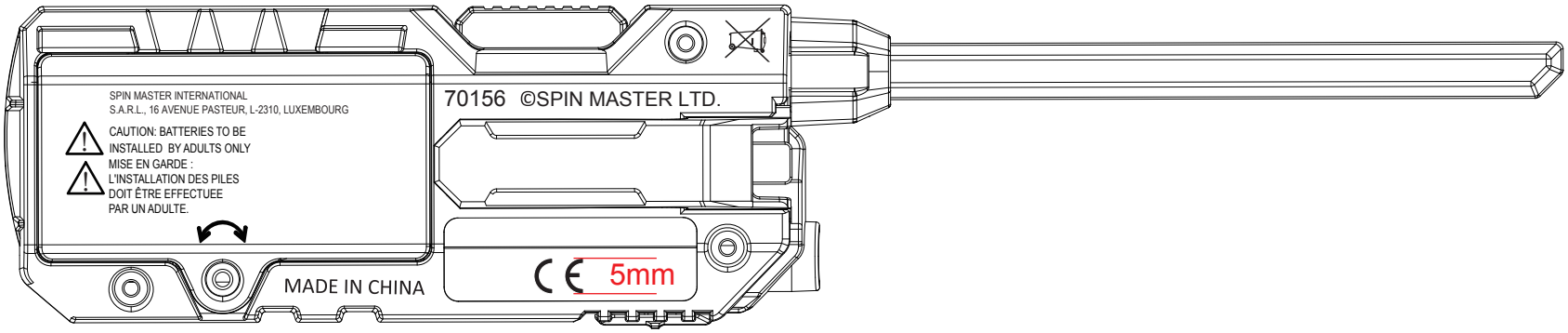
SPIN MASTER INTERNATIONAL
S.A.R.L., 16 AVENUE PASTEUR, L-2310, LUXEMBOURG
CAUTION: BATTERIES TO BE
INSTALLED BY ADULTS ONLY
MISE EN GARDE :
L'INSTALLATION DES PILES
DOIT ÊTRE EFFECTUEE
PAR UN ADULTE.
70156 ©SPIN MASTER LTD.
MADE IN CHINA
5mm

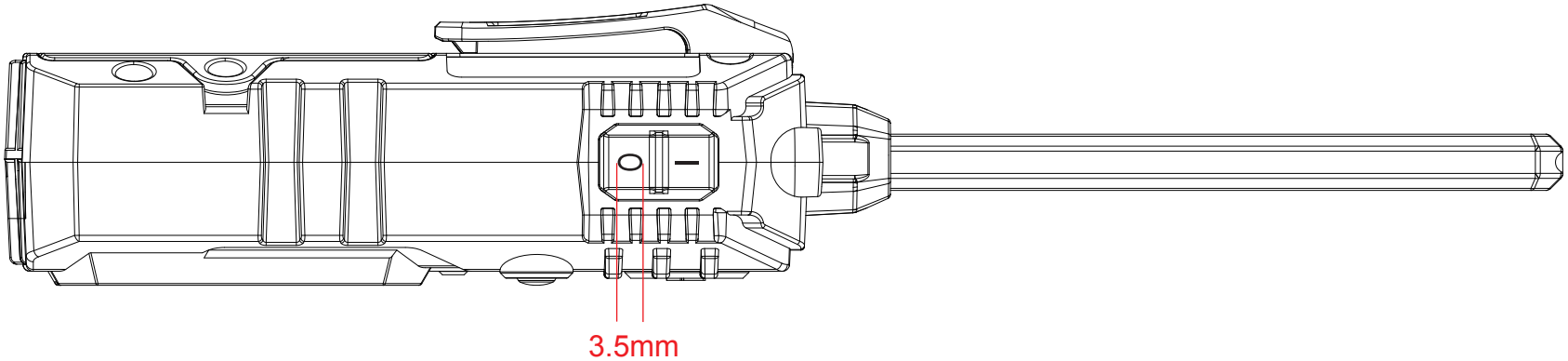
3.5mm