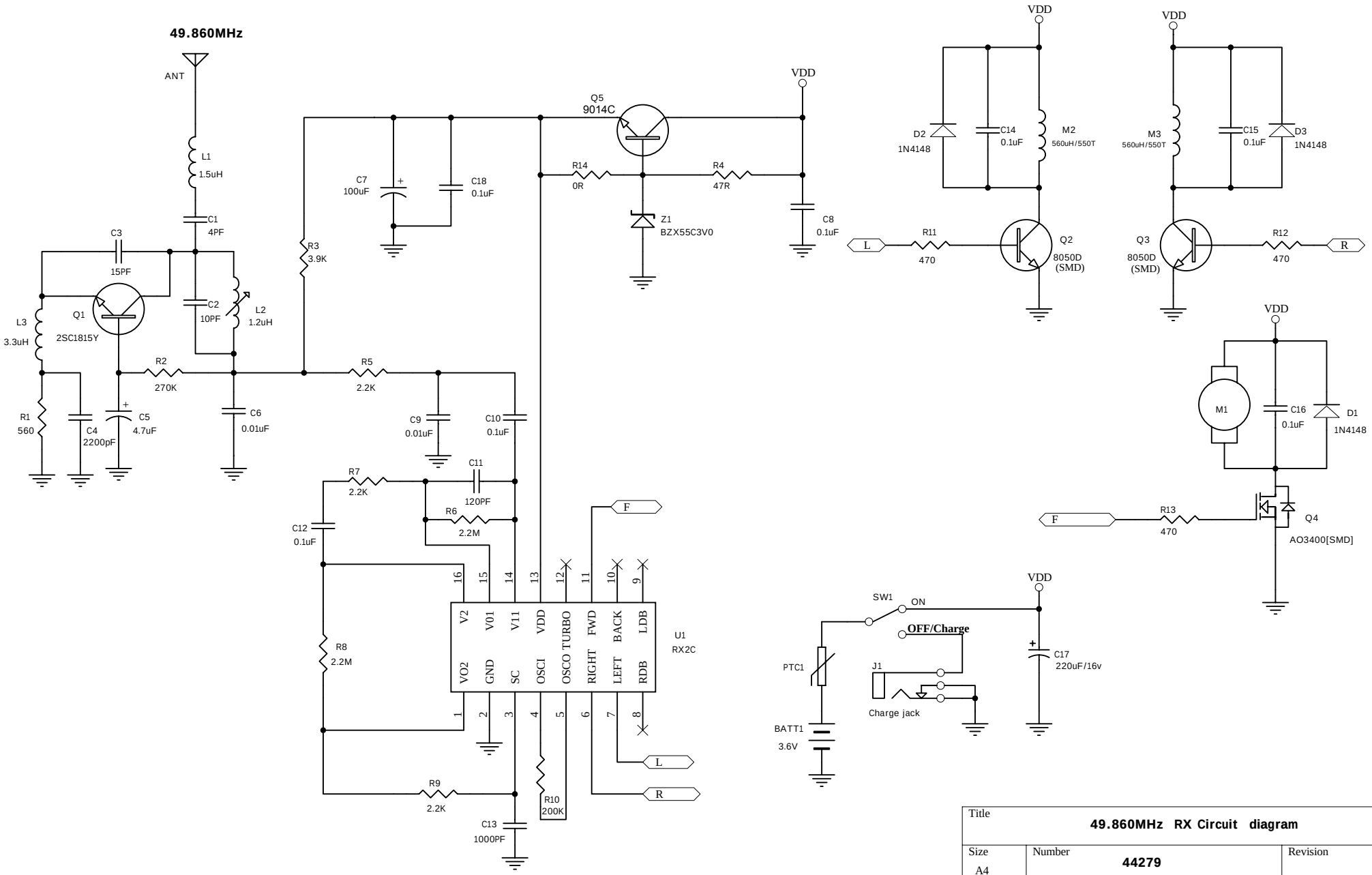

Title	**49.860MHz RX Circuit diagram**	
Size A4	Number **44279**	Revision
Date: 14-Jun-2007		Sheet of
File: Z:\TEMP\..\RX49M-~2.SCH		Drawn By: