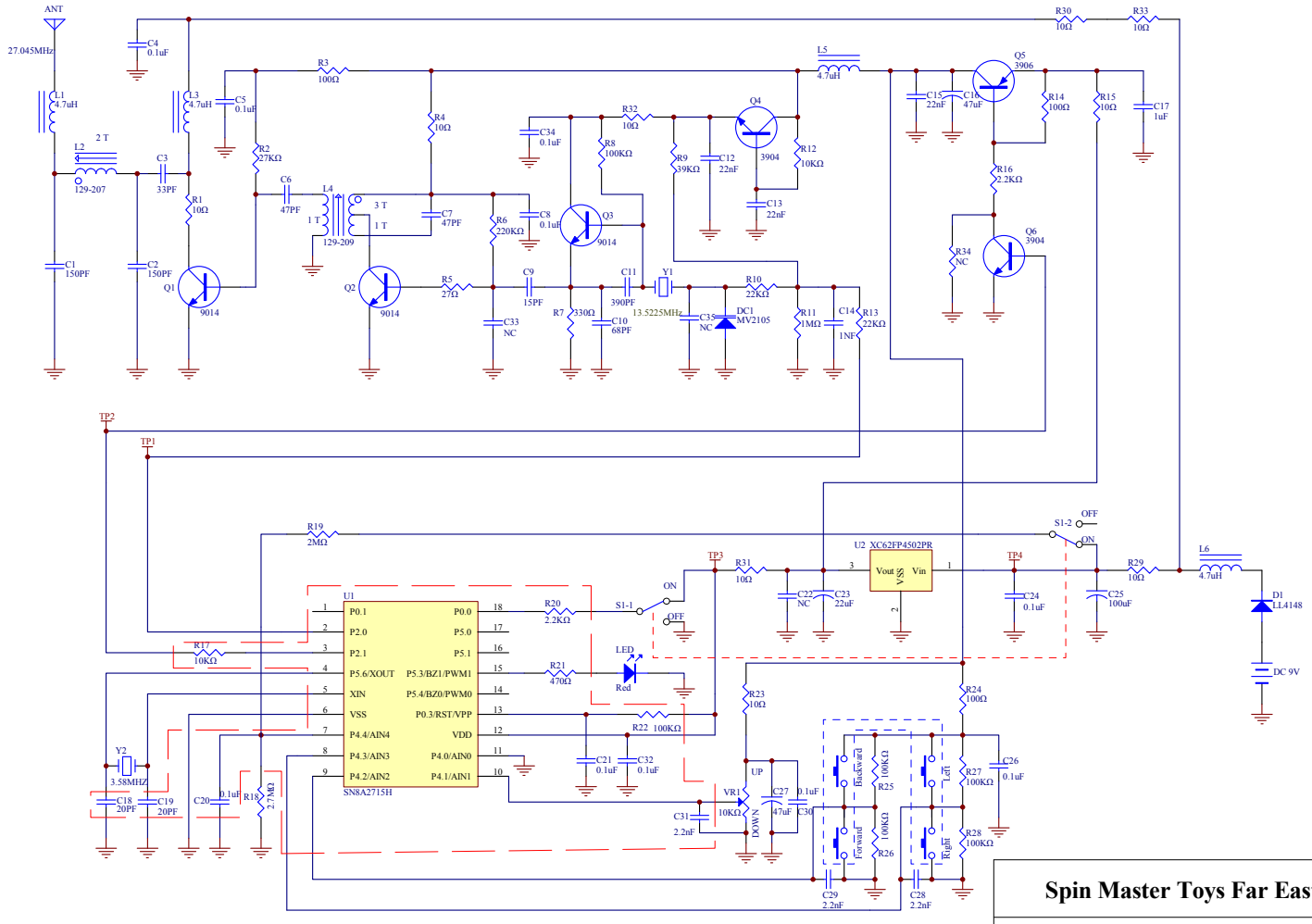

Note : NC=No Connection

Spin Master Toys Far East Limited

Title: Air Hogs R/C Helix Micro Helicopter

44207 Asst. No. 44164 27.045MHz TX Schematic

Size	DWG NO	Issue Date:	Rev.
A3		29 Apr 2006	7a
Drawn:	APP'D:	Sheet 1 of 1	