REV	DETAIL of CHANGES	DATE
	PRELIMINARY	

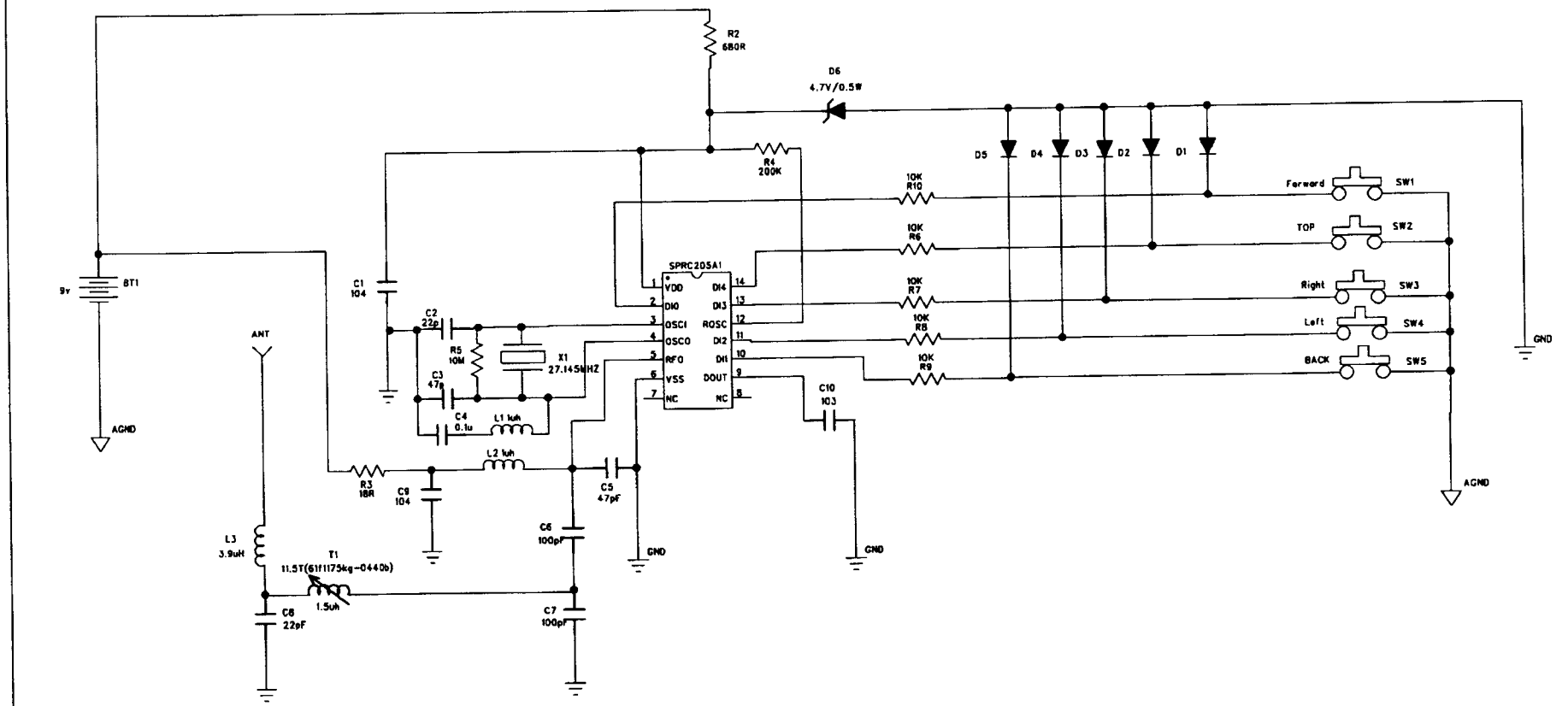

MODE:	Mini Regenerator	KIN YAT INDUSTRIAL CO.,LTD
MODEL NO:	14104	DESCRIPTION: Mini Regenerator TX - 27MHz
PCB NO:	60TX154R0-94HB-2	
PCBA NO:		
DICE NO:		PAGE: 1 of 1 REV: R0
DRAWN BY:	Hong	ISSUED DATE: 28-04-2004