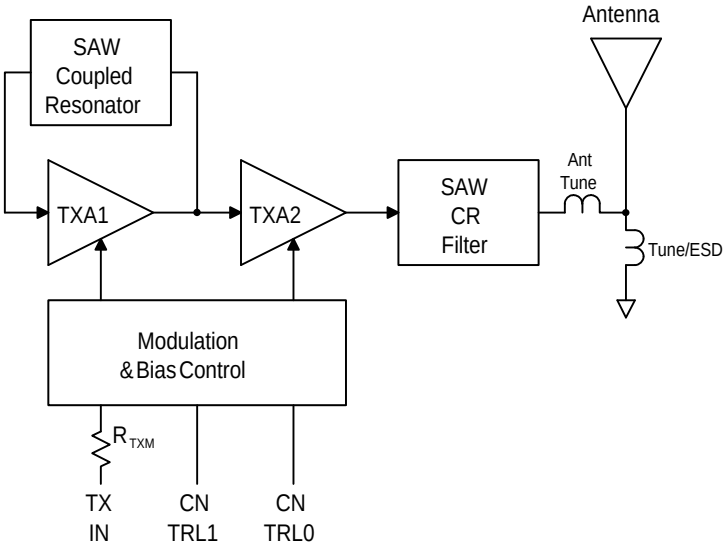Transmitter Block Diagram