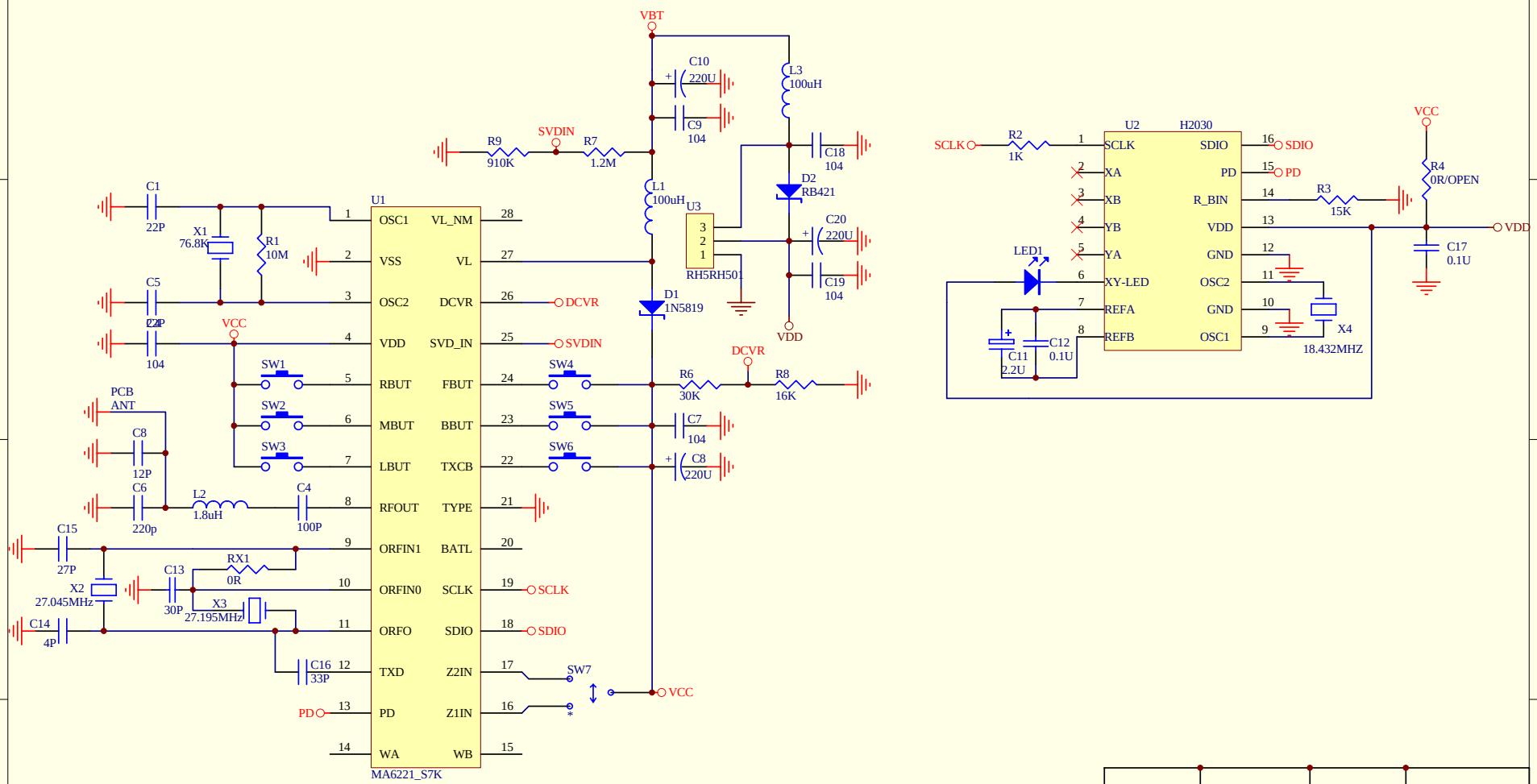

Units	Scale	sheet	rev	DR	CHKD	APPD
mm		1 of 1	1.0	HUYUQING		

MLK
Industries(shenzhen)Limited