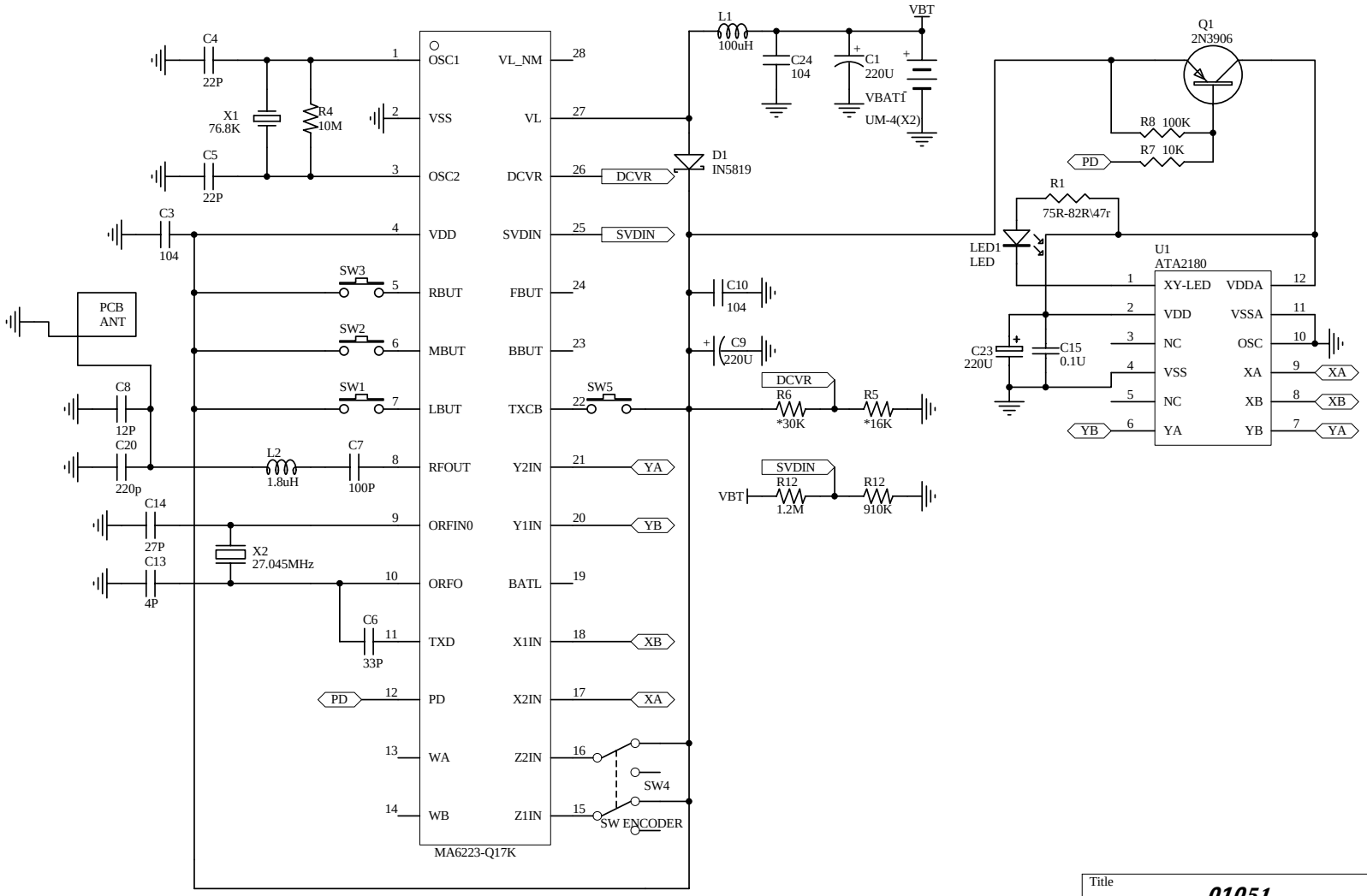

Title		
01051		
Size A4	Number	Revision
Date: 23-Feb-2006		Sheet of
File: 开发文档		Drawn By: