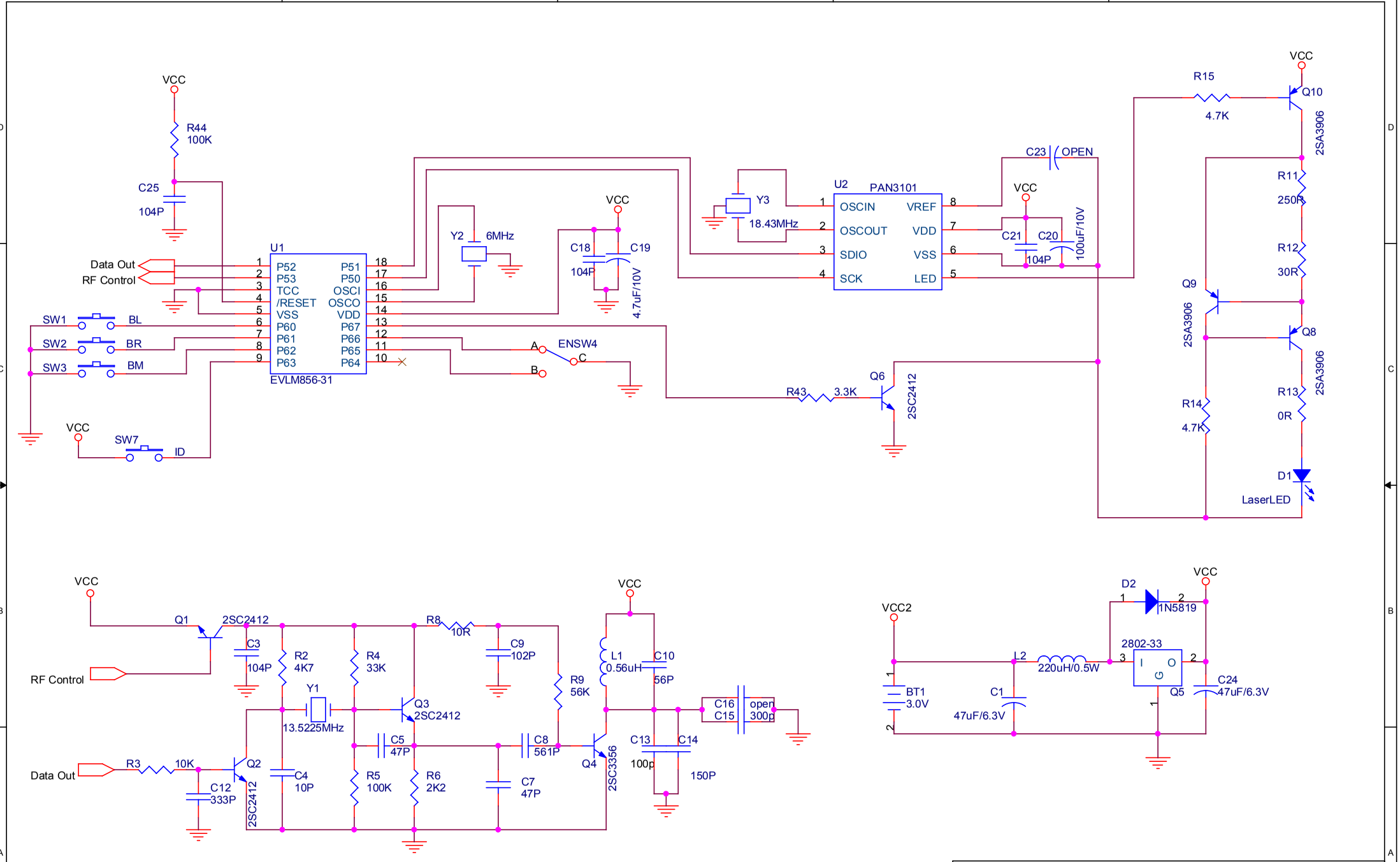

无线激光鼠		
Title RF TX OMRF 5Key with ID		
Size A4	Document Number RFTX003	Rev V03
Date: Monday, October 13, 2008	Sheet 1 of 1	