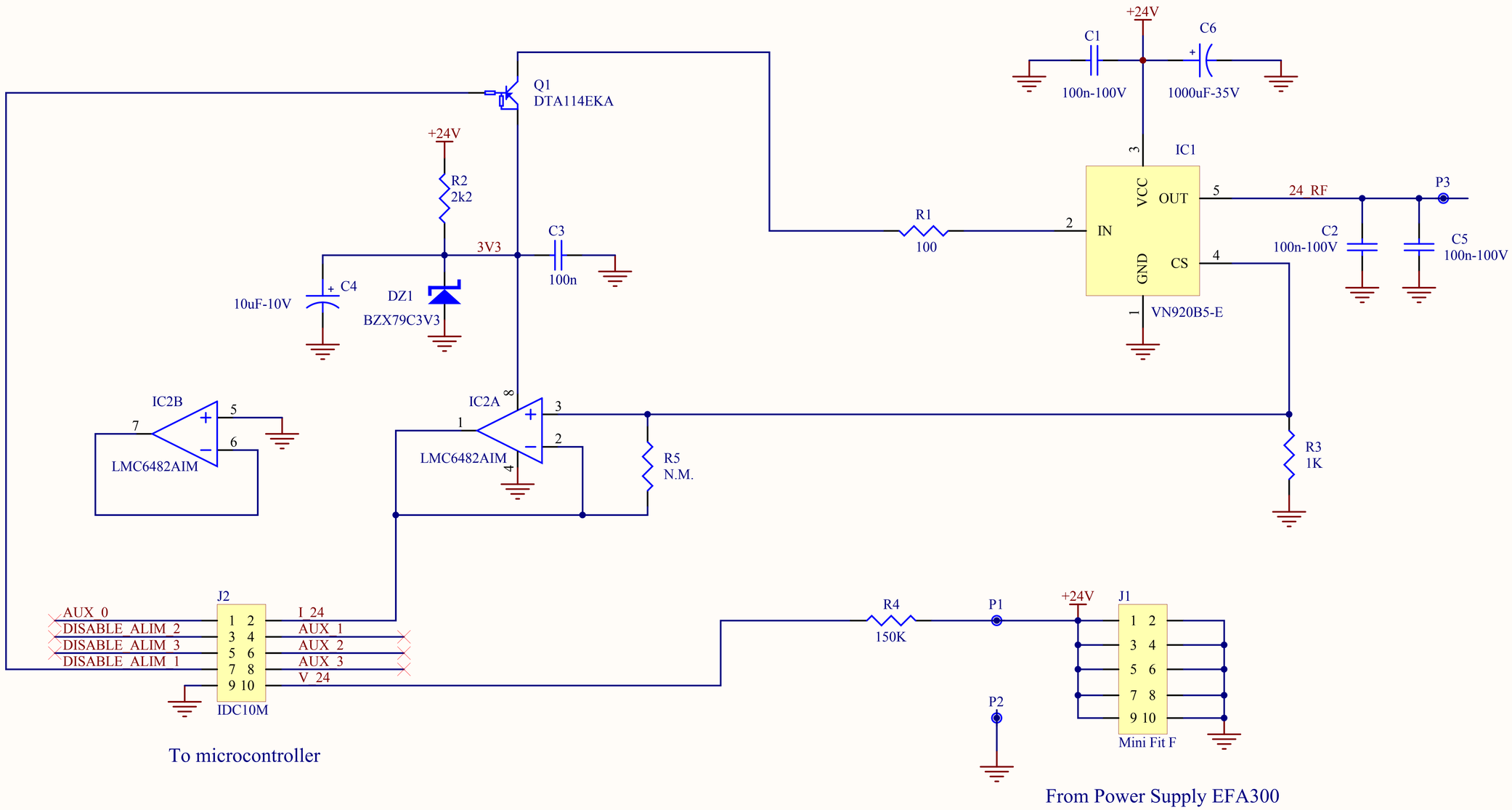

Fid1 Fid2 Fid3 Fid4

PCB1

Title: *634S10 MotherBoard ARK6*		Author : *Alberto Serafini Danesi*	Approved by : *Azelio Boriani, Roberto Poggi*
Revision: A	Date: 07-07-2010		
Size: A4	Sheet 1 of 1		
File: C:\Altium\634S10 MotherBoard ARK6\634S10 MotherBoard ARK6.SCHDOC			

Screen Service