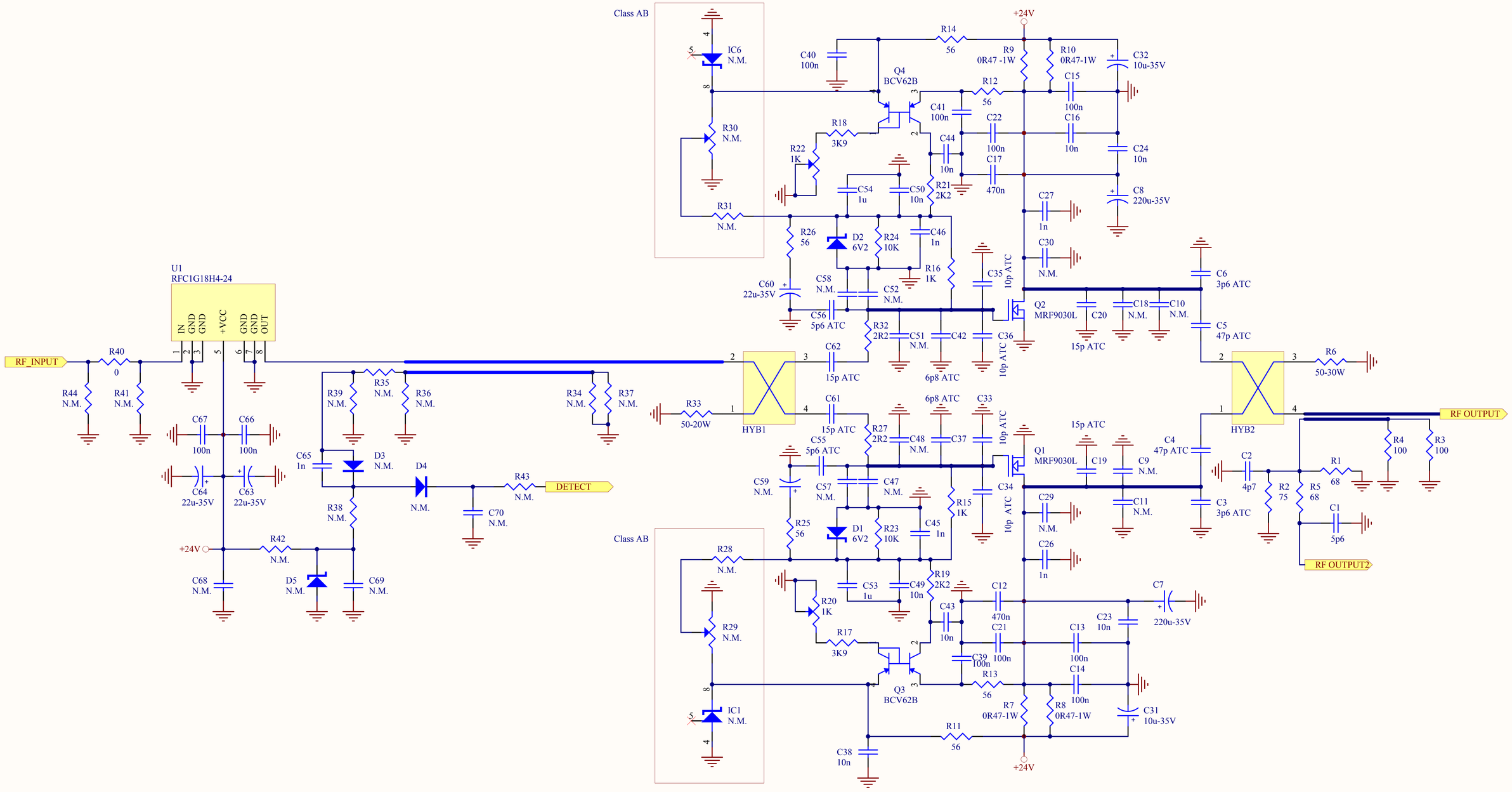

Title	454S06 Amplifier 50 W All Version	
Size A3	Number	Revision rev_A
Date: 21/09/2007		Sheet of
File: C:\Altium\..\454S06 Ampli 50W All version.PcbDoc		Drawn by: