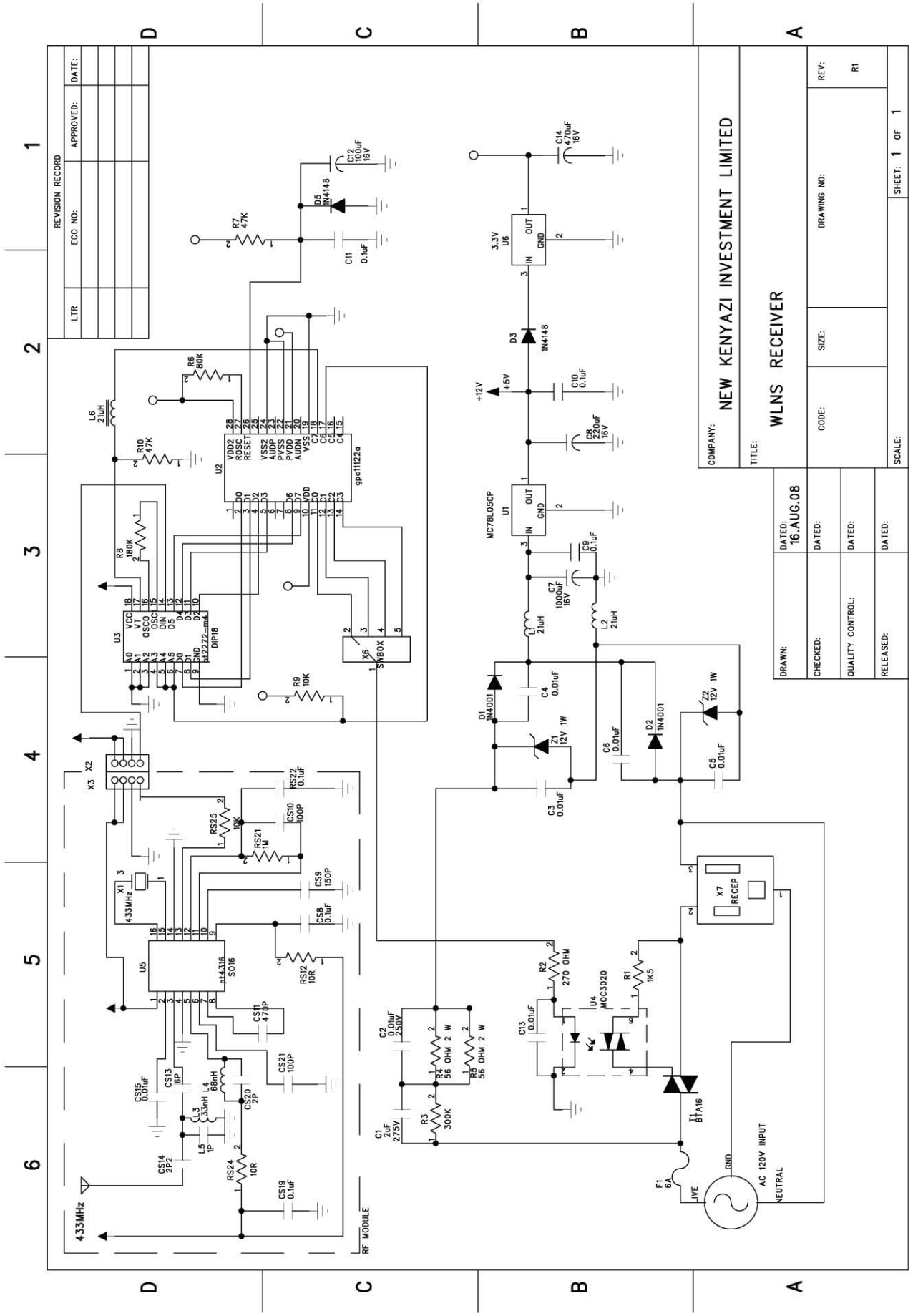
REVISION RECORD
LTR
ECO NO:
APPROVED:
DATE:
COMPANY:
NEW KENYAZI INVESTMENT LIMITED
TITLE:
WLNS RECEIVER
CODE:
SIZE:
DRAWING NO:
REV:
R1
SCALE:
SHEET: 1 OF 1
DRAWN:
DATED: 16.AUG.08
CHECKED:
DATED:
QUALITY CONTROL:
DATED:
RELEASED:
DATED:
U2
gpc11122a
U3
p12272-m4
DIP18
U5
p14316
SO16
U1
MC78L05CP
U6
X1
433MHz
X2
X3
X6
SWBOX
X7
RECEP
U4
MOC3020
T1
BTA16
F1
6A
AC 120V INPUT
LIVE
NEUTRAL
GND
RF MODULE
433MHz
3.3V
+12V
+5V