REVISION RECORD		
ECO NO:	APPROVED:	DATE:

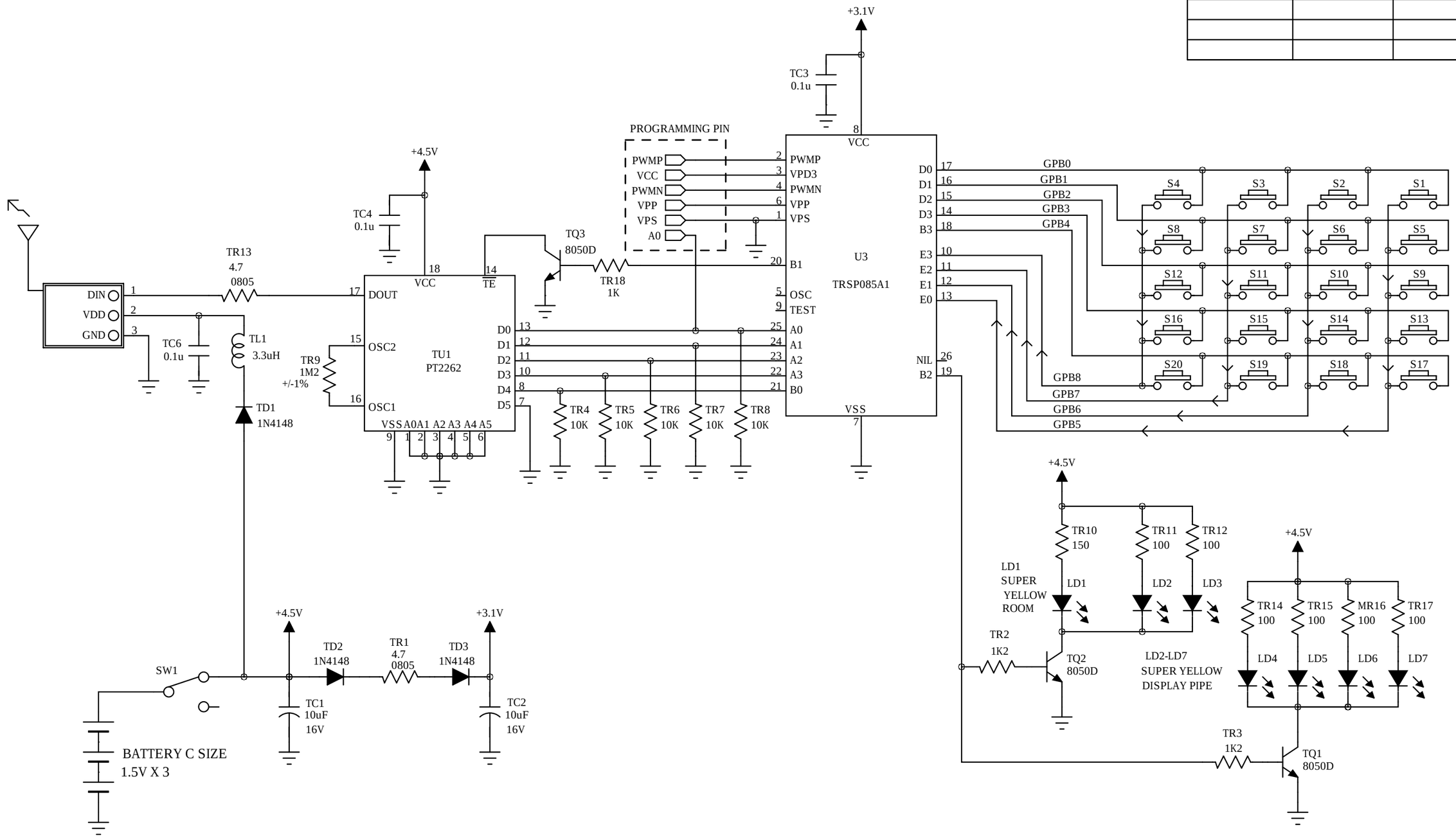

DRAWN: K	DATED: 25-JAN-2013	SCHEMATIC DIAGRAM
CHECKED: K	DATED: 25-JAN-2013	MODEL: LIGHTS AND SOUNDS ROCK-O-RAMO
APRROVED:	DATED:	TITLE: KEY CONTROL & RF TRANSIMTTER (TX)
		DRAWING NO: / REV: 0 / SHEET: 3 OF 3