OBID®
FEIG
ELECTRONIC
megalock-I
CE FCC ID PJMMLL02
IP 43
Pat. No. EP0911466, EP1288401

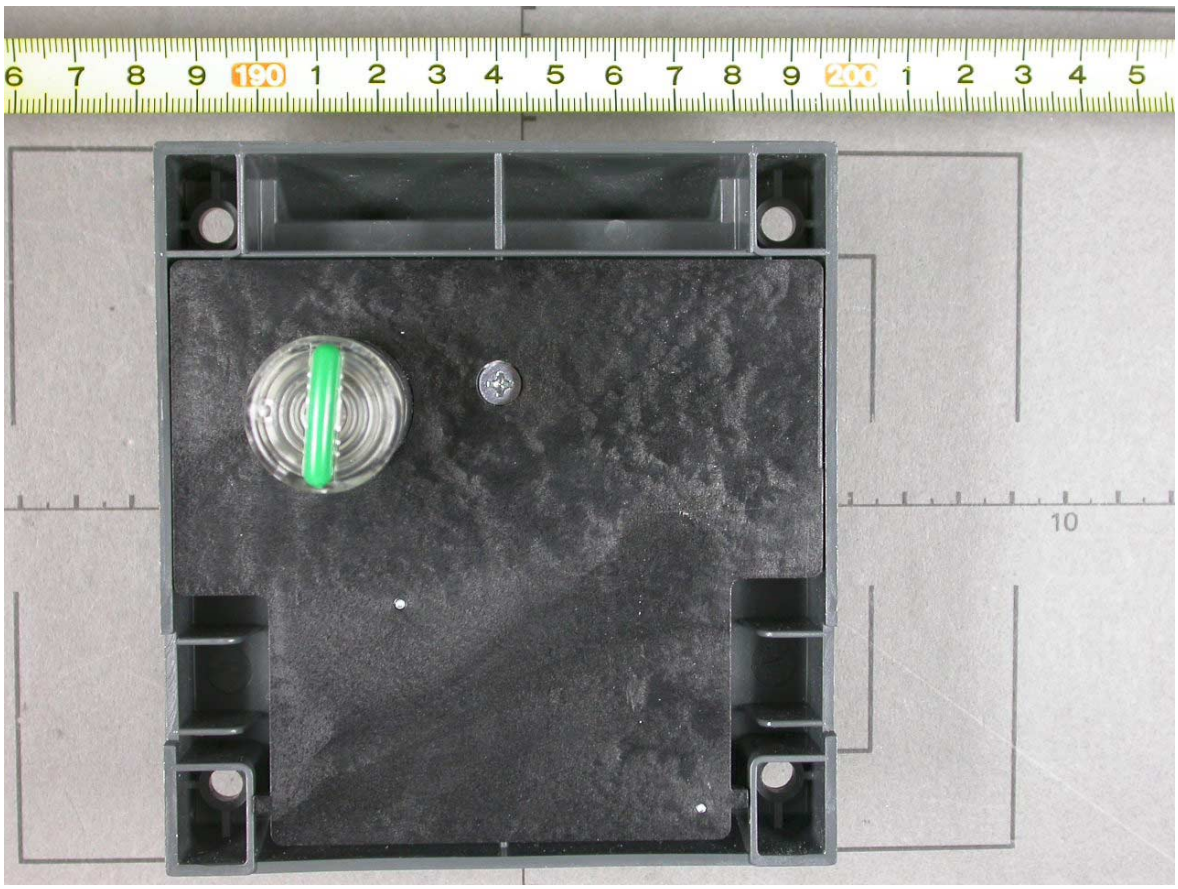

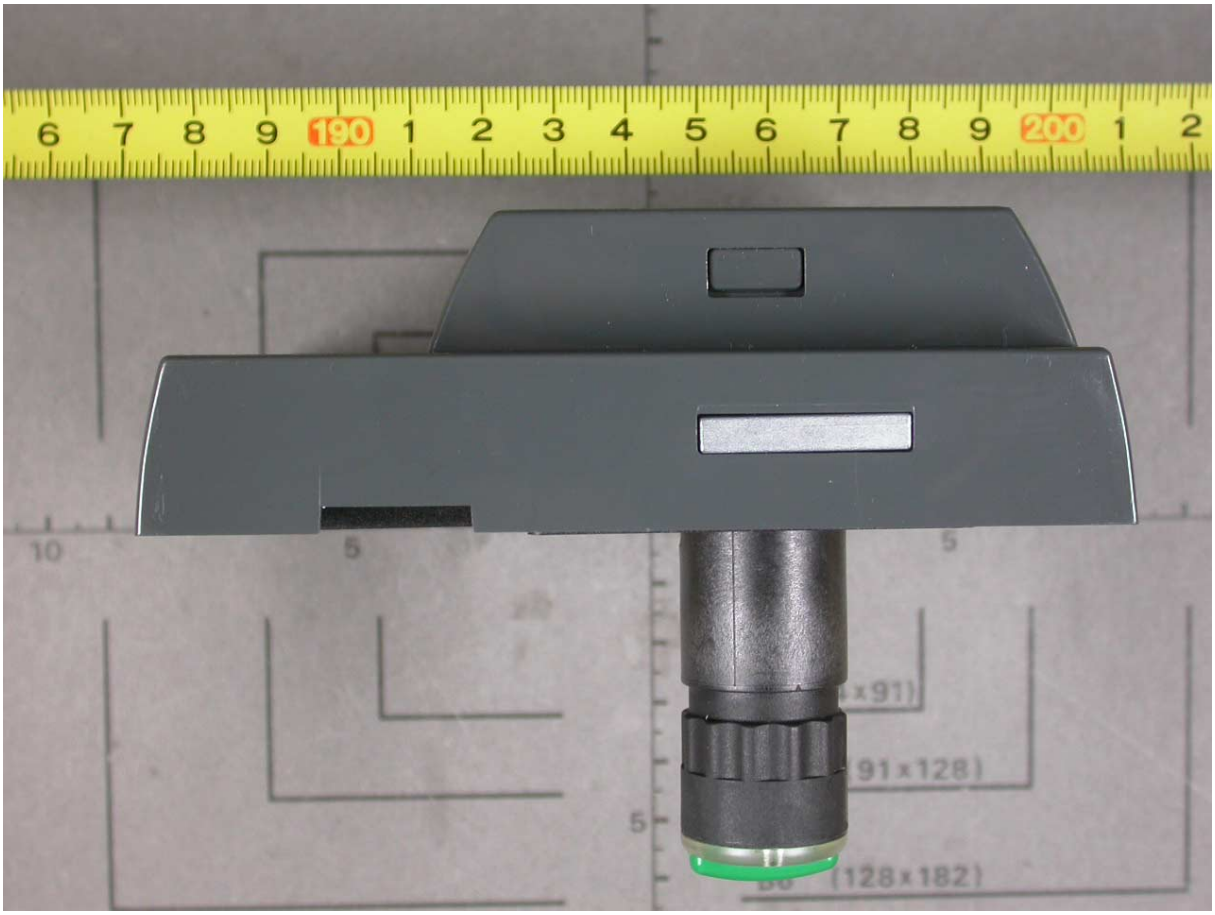
6 7 8 9 190 1 2 3 4 5 6 7 8 9 200 1 2
10
5
5
5
(91×128)
(128×182)

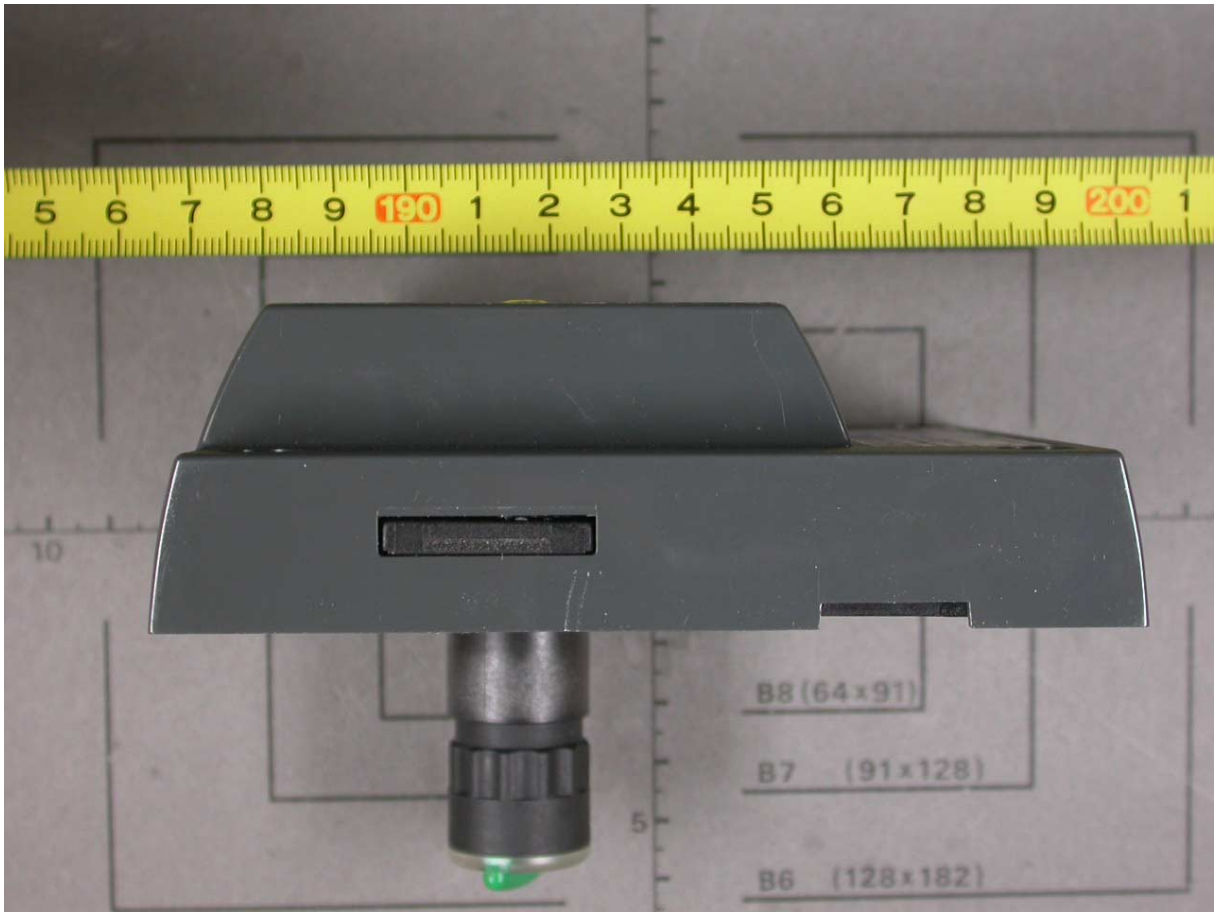
B8 (64×91)
B7 (91×128)
B6 (128×182)

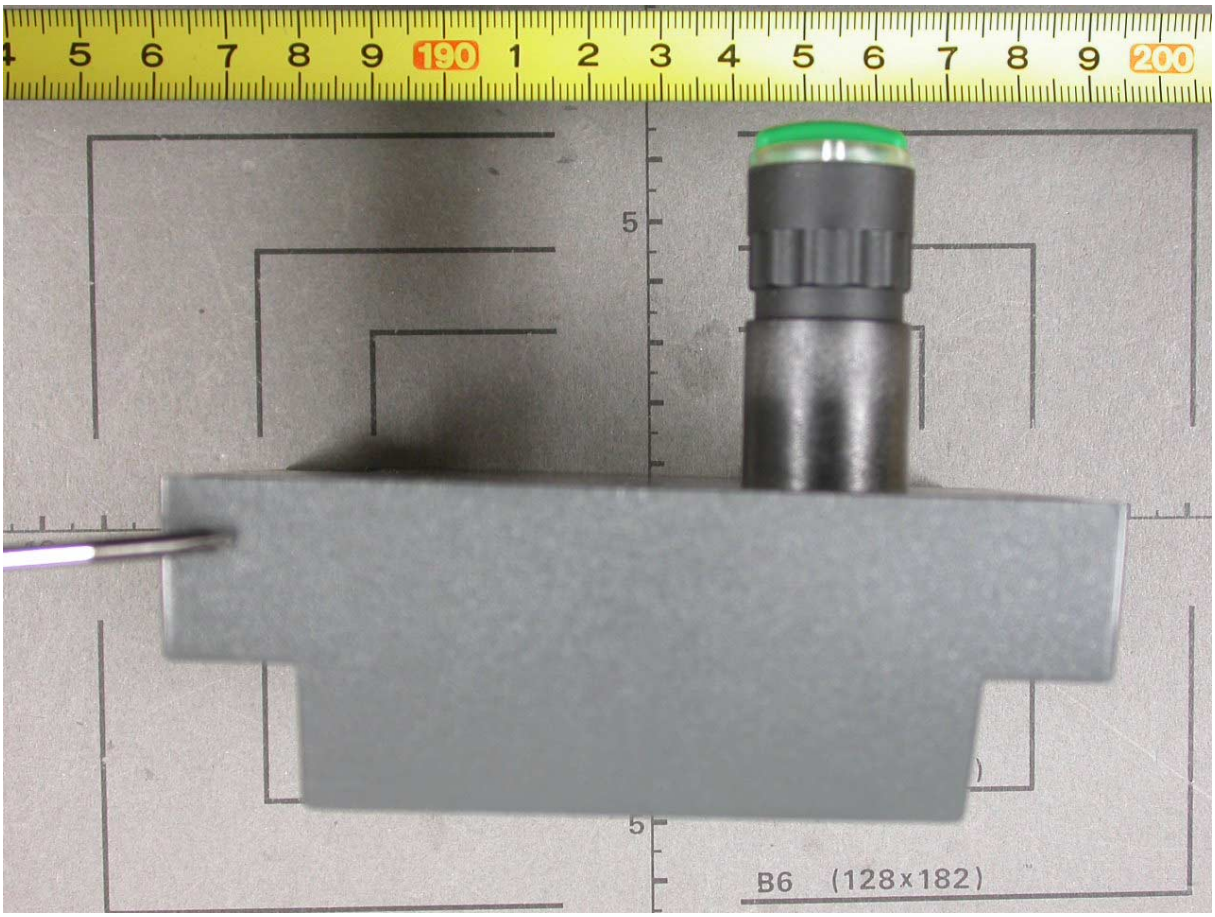
B6 (128x182)

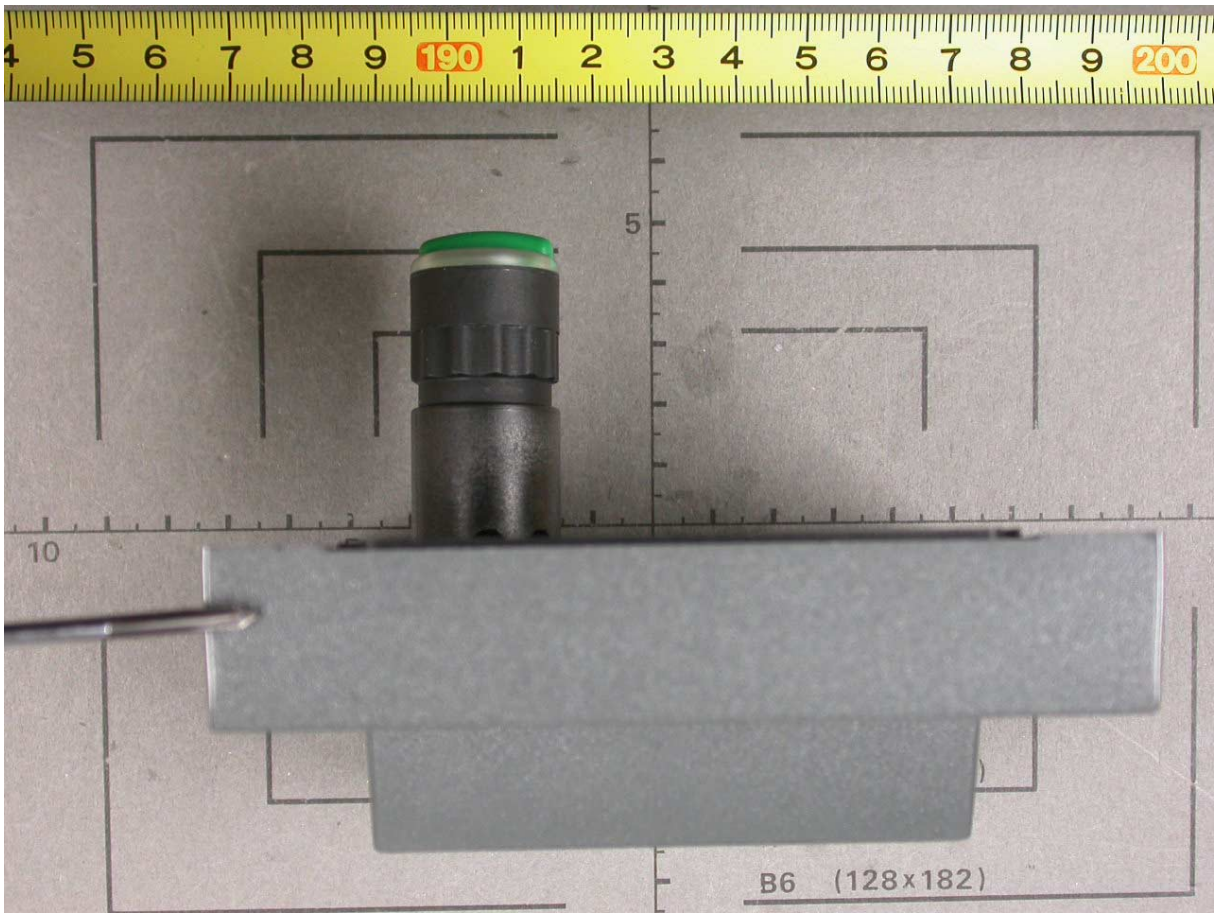
B6 (128×182)