ATTACHMENT C.

- BLOCK DIAGRAM

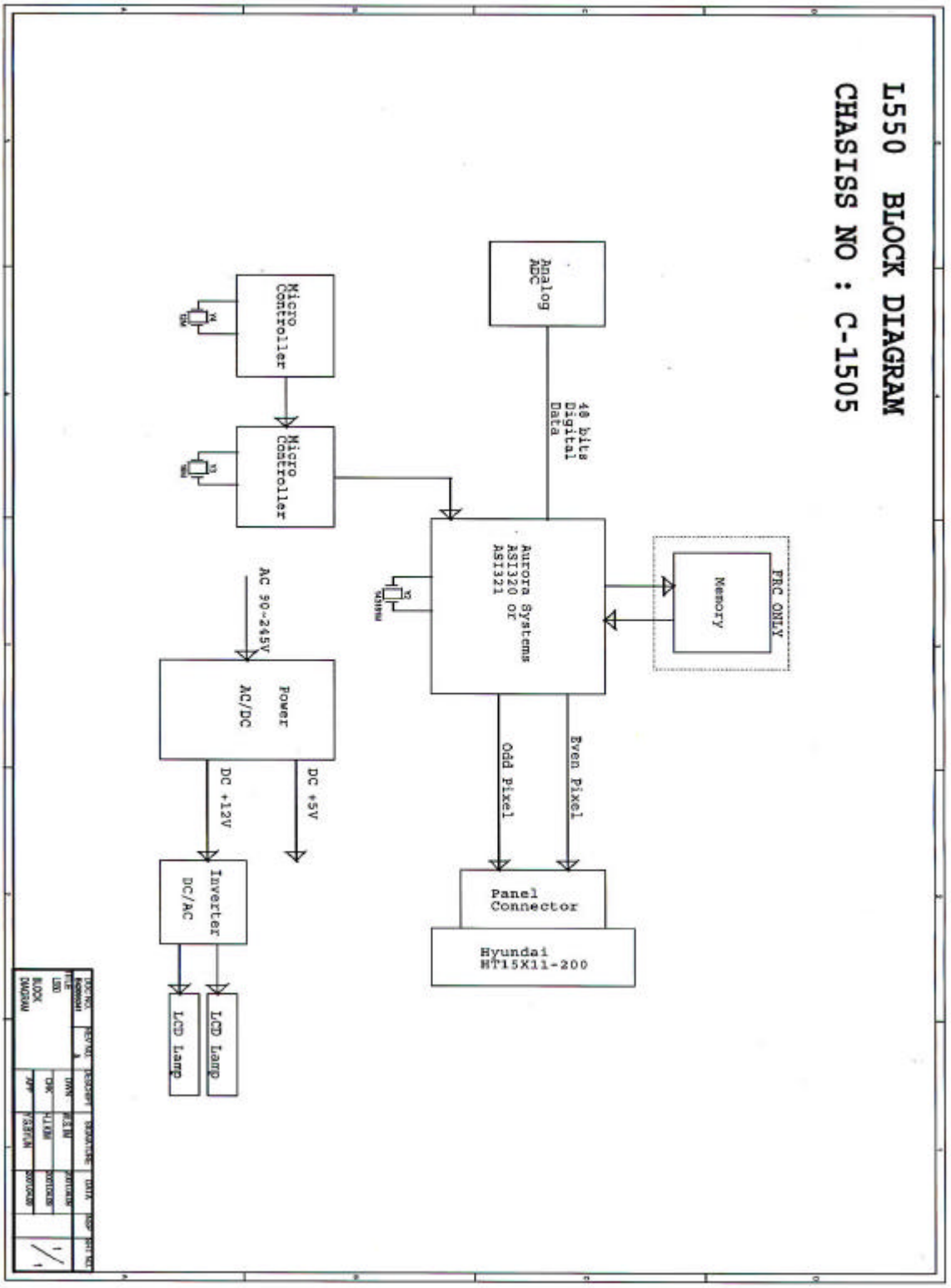
L550 BLOCK DIAGRAM
CHASISS NO : C-1505
FRC ONLY
Memory
Analog ADC
40 bits Digital Data
Aurora Systems ASI320 or ASI321
Micro Controller
Micro Controller
Power AC/DC
AC 90~245V
DC +12V
DC +5V
Odd Pixel
Even Pixel
Panel Connector
Hyundai HT15X11-200
Inverter DC/AC
LCD Lamp
LCD Lamp