SmartPilot
S1000 Autopilot
Installation Guide

Document Number: 87040-1
Date: December 2004

Raymarine®

Welcome to the Raymarine S1000 Autopilot

Congratulations on having bought a Raymarine S1000 Autopilot. This state-of-the-art product is specifically designed to be easily integrated with your boat's steering system, and enable you to automatically control the steering.

S1000 Autopilot System

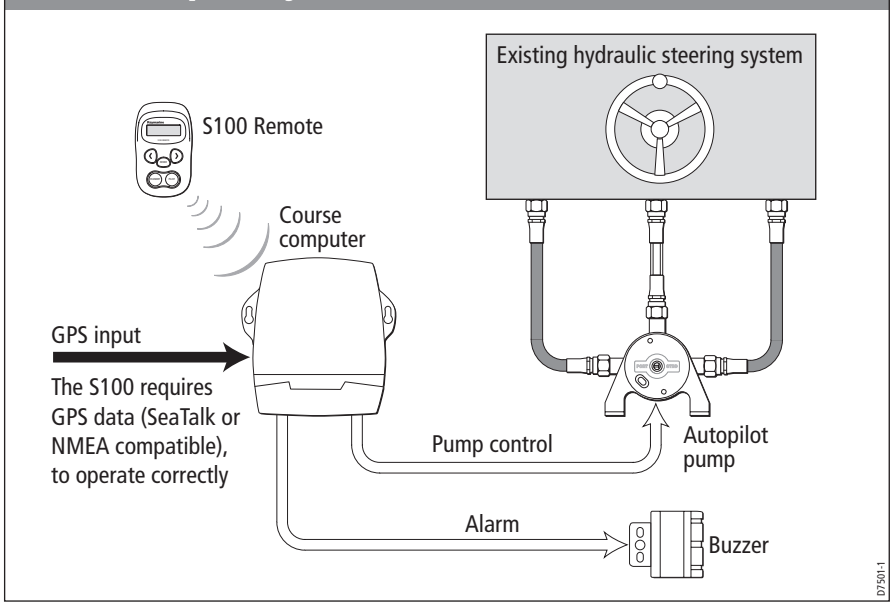

The S1000 Autopilot is intended for use in:

- HC5345, HC5347, HC5348, and HC5358 SeaStar steering systems.
- Systems with HC4600, HC4645, HC4647, HC4648, and HC4658, BayStar steering rams.
- Systems with Hynautic K6 steering rams.

Installation overview

1. Connect the autopilot pump to your existing steering system.
Page 9

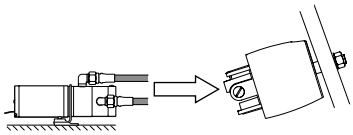

2. Bleed the steering system.
Page 12

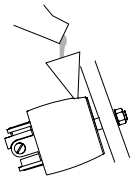

3. Secure the autopilot pump.
Page 16

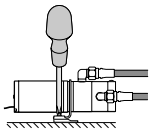

4. Fit the course computer.
Page 17

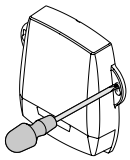

5. Fit miscellaneous items
Page 18

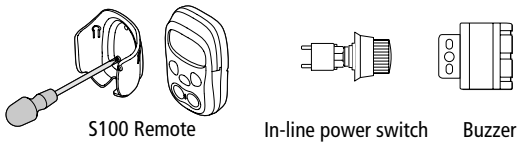

6. Make electrical connections
Page 21

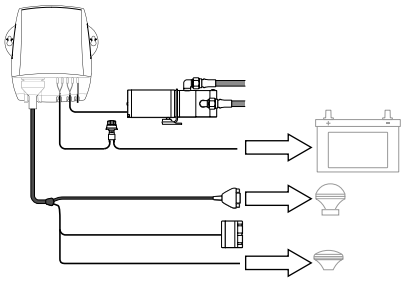

7. Carry out post installation checks
Page 28

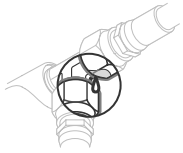

D7583-1

This guide

Before starting to install your S1000 Autopilot, please take time to read this guide. In particular, please take note of the safety and electromagnetic compatibility (EMC) information at the end of this guide.

WARNING:
This product must be installed and operated in accordance with the Raymarine instructions provided. Failure to observe this could result in personal injury, damage to the boat and/or poor product performance.

The installation procedures are described in a rational sequence, but because of variations in boat design, space available etc, you may need to adapt the sequence to suit your particular circumstances.

Before you start fitting your S1000 Autopilot, we recommend you:

- Unpack your S1000 Autopilot and check that all parts are present.
- Plan your S1000 Autopilot installation so that you fit the components in the best possible locations.

Important note

The S1000 Autopilot must receive position information from a suitable GPS in order to function correctly. GPS systems compatible with SeaTalk or NMEA or both, are suitable. If you need advice as to which GPS to use, please contact your Raymarine dealer.

What you need

Parts supplied

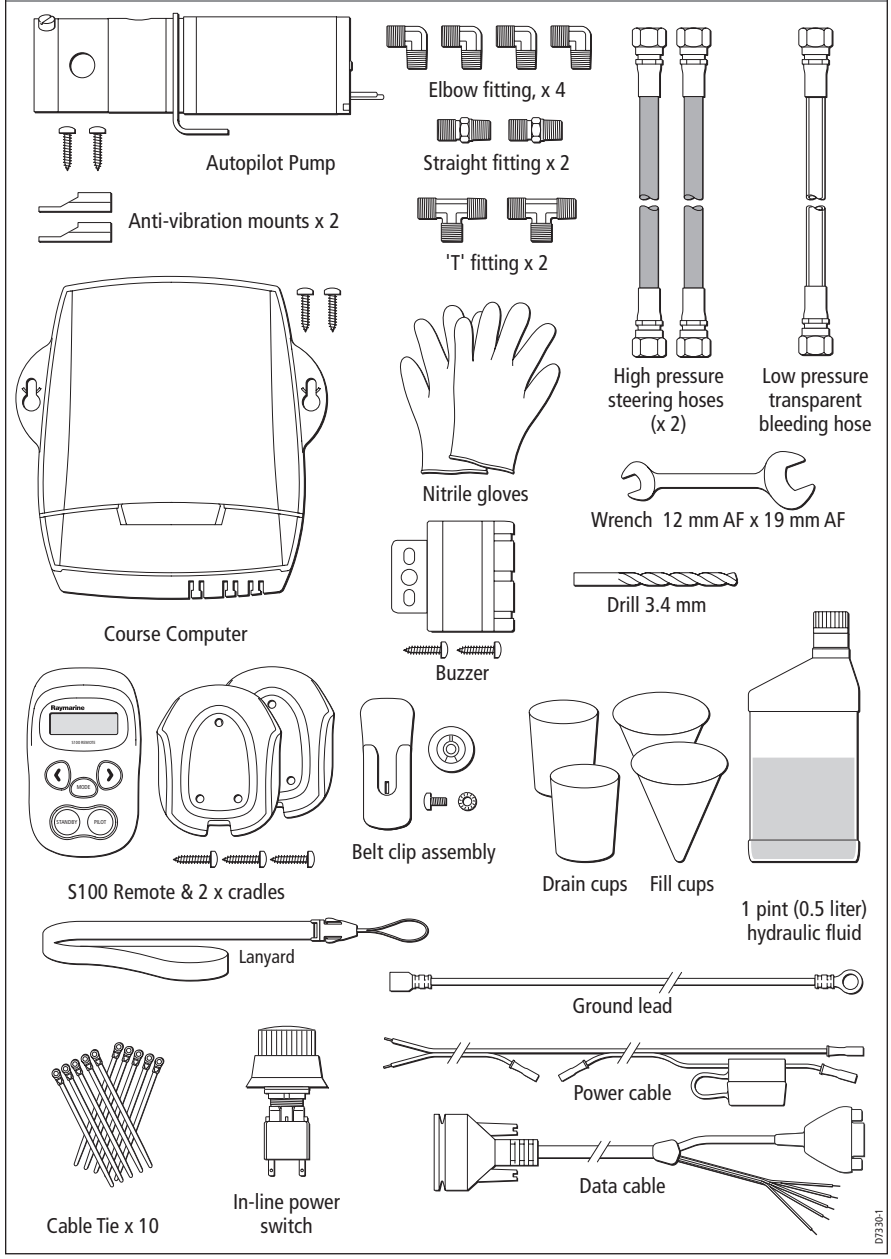

Tools & materials required

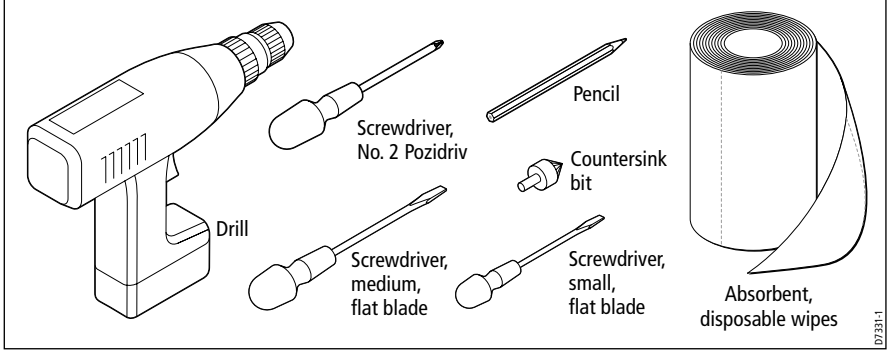

Planning

In order to make the installation as trouble free as possible, we strongly recommend you spend adequate time planning the best locations for your autopilot components. This is particularly important when considering the position of the autopilot pump, as hydraulic hoses are supplied in fixed lengths, so there are some limitations on the positioning of the autopilot pump with respect to the boat's helm pump.

If you have internet access, please view the installation video on line at www.raymarine.com.

Before you disturb your hydraulic steering system, we strongly recommend that you consult the manufacturer and read the steering system manuals.

Locating the course computer

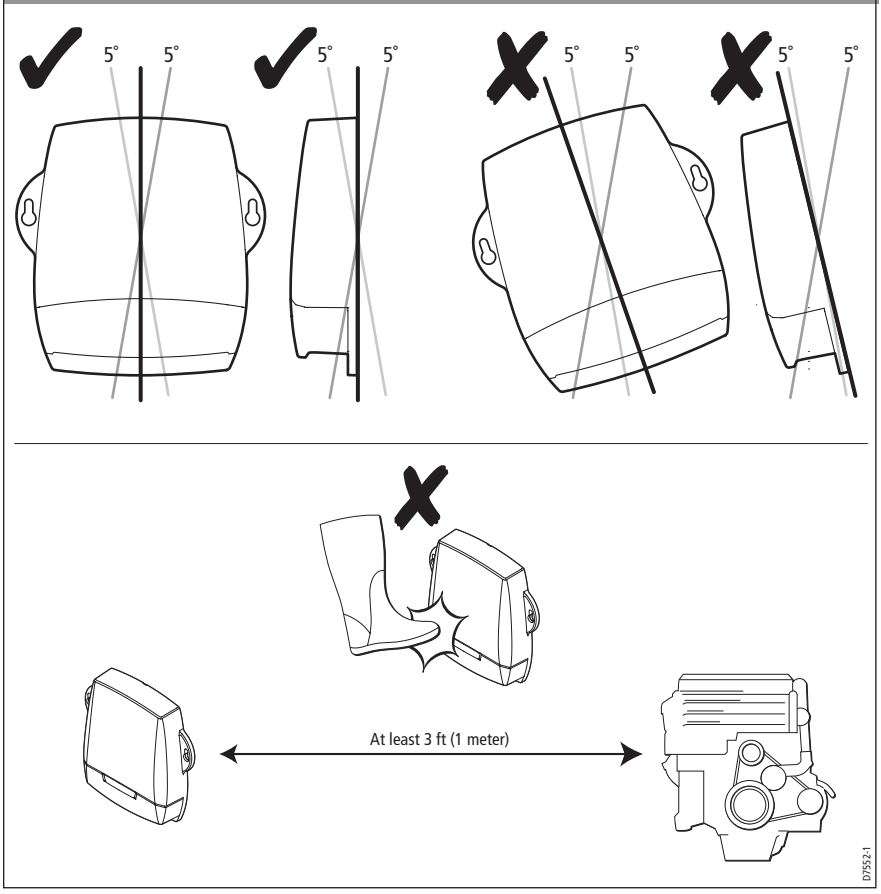

Locating autopilot pump

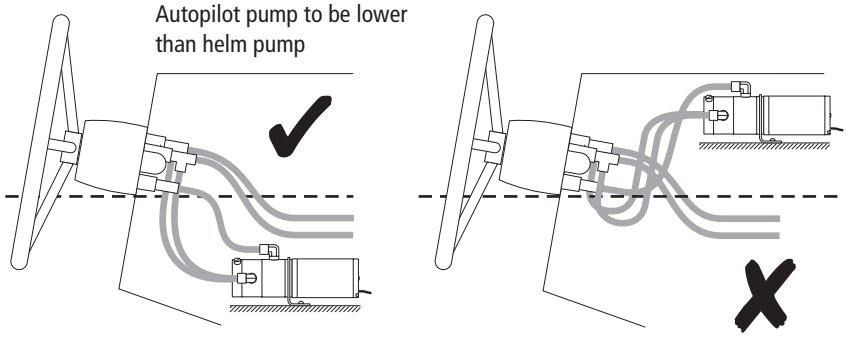

Provide protection from physical damage.

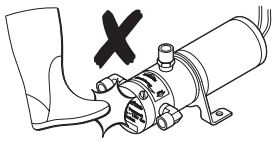

Install in a dry location.

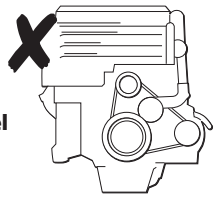

Do not fit in engine compartments, near fuel tanks or in any other area where fuel vapor is likely.

No sharp bends, kinks or chafing of tube

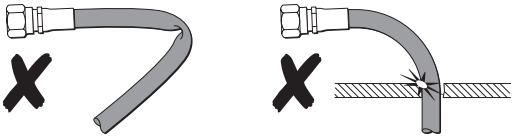

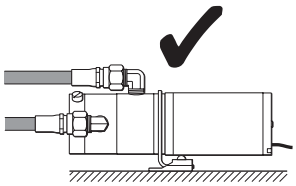

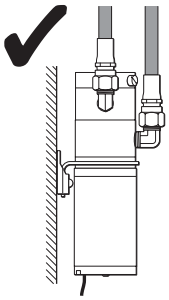

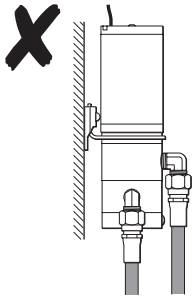

Mount pump location either horizontally or with connector end up.

Do not mount pump with connector end down.

D7350-1

Using the hydraulic hoses

Three, pre-assembled hydraulic hoses are supplied. Two of these are dark-colored, high pressure steering hoses and the third is a transparent low-pressure hose.

The transparent hose is intended to help you check for air bubbles when bleeding the system and must be used only to connect the autopilot pump reservoir to the lower connector on the helm pump. It must NOT be used anywhere else in the system.

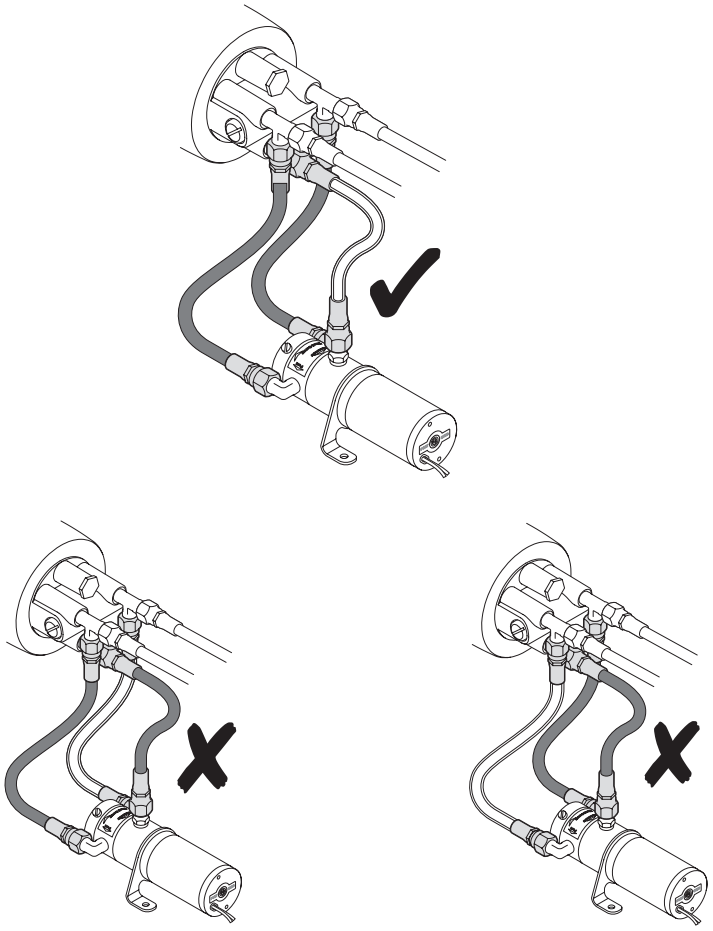

Sealing hydraulic joints

CAUTION:
Do not use sealing tape on any part of a hydraulic system, as this can disintegrate and the resulting particles can cause blockages in the hydraulic system.

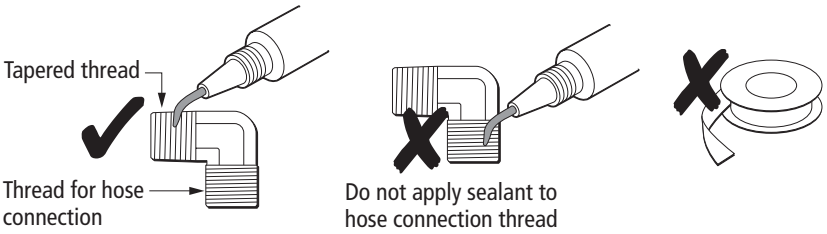

Note: *The hydraulic fittings supplied with the autopilot pump have sealant pre-applied to the tapered threads. You only need you to apply sealant to any extra joints you may obtain. The recommended sealant for doing this, is Loctite 542.*

D7545-1

Installing tapered thread fittings

1. Hand tighten

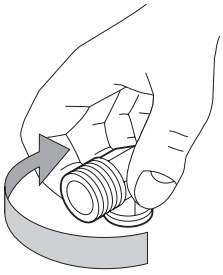

2. **CAUTION:**
Do not exceed 13 ft/lbs (17.6 Nm) torque.

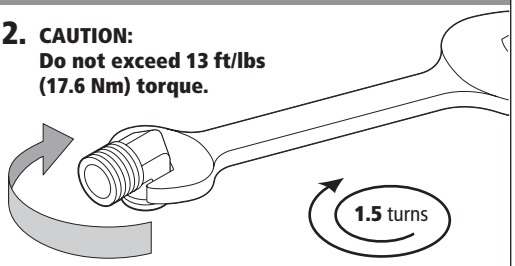

From hand tight, use a wrench to tighten the joint a further **1.5** turns. This should make it leakproof.

3. **CAUTION:**
Do not exceed 13 ft/lbs (17.6 Nm) torque. DO NOT EXCEED 2.5 TURNS in total, from hand tight.

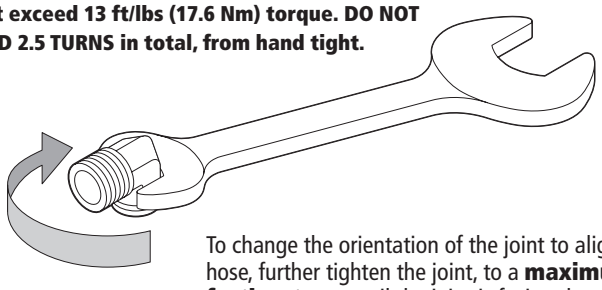

To change the orientation of the joint to align it with the hose, further tighten the joint, to a **maximum of one further turn**, until the joint is facing the required direction.

D7546-1

Installation procedures

1. Connecting the autopilot pump

Connecting the autopilot pump, sheet 1

WARNING:
Do not allow hydraulic fluid to come into contact with your skin. Wear the protective nitrile gloves provided when working with hydraulic fluid.

WARNING:
A sudden release of pressure from a hydraulic system could result in personal injury. Before disconnecting any part of a hydraulic steering system, safely release any pressure in accordance with the manufacturer's instructions.

WARNING:
The autopilot pump is not suitable for use in the vicinity of engines, fuel tanks or in any other area where fuel vapor is likely to be present.

CAUTION:
Do not use the transparent hose for connecting any part of the steering system other than between the autopilot pump reservoir and the lower connector on the helm pump.

1. Secure the required hydraulic joints (elbow or straight) into the autopilot pump, as described under *Fitting hydraulic joints.*

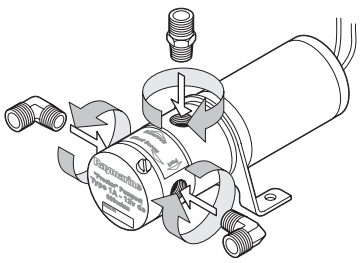

2. Connect hydraulic hoses to autopilot pump. Ensure the transparent hose is connected to the reservoir connector.

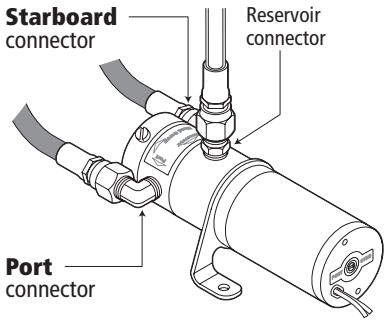

D7345-1

Connecting the autopilot pump, sheet 2

3. Set steering to dead ahead and do not move it until instructed.

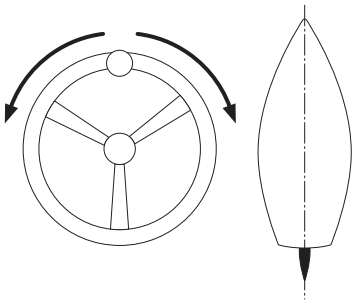

4. Remove & retain the helm pump breather cap.

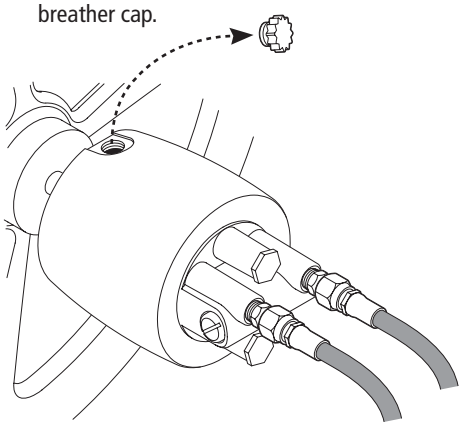

5. Remove & retain the plug from the helm pump lower port and drain the fluid into one of the cups provided. Discard the drained fluid in accordance with local regulations.

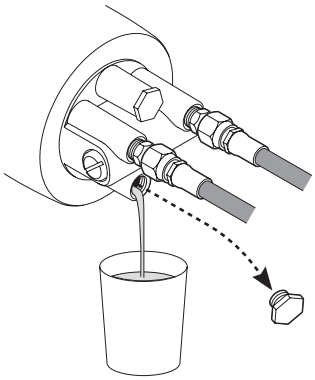

6. Label the port ram hose to aid future reassembly, then disconnect both ram hoses & straight connectors from the helm pump.

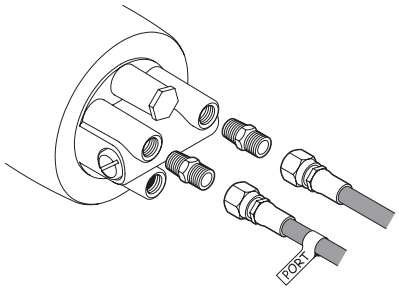

7. Using the *Fitting hydraulic joints* procedure, fit 'T' connectors to the helm pump port (P) and starboard (S) connectors, and a straight connector to the helm pump lower connector.

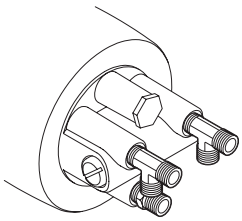

D7483-1

Connecting the autopilot pump, sheet 3

8. Connect hydraulic steering hoses from autopilot pump **Port** and **Starboard** connectors to the Port and Starboard connectors on the helm pump, so that Port connects to Port, and Starboard connects to Starboard .

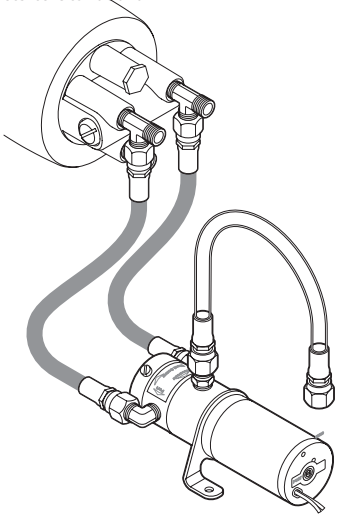

9. Re-connect the ram hoses to the appropriate helm pump 'T' connectors.

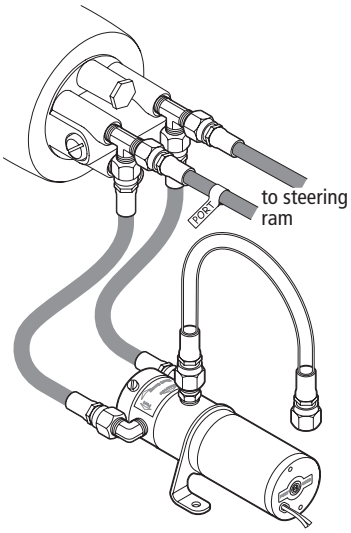

10. Connect the transparent hose from autopilot pump reservoir hose to the straight connector at the helm pump lower connector.

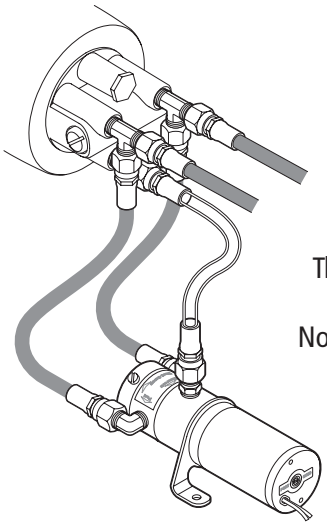

This completes the connection of the autopilot pump.
Now bleed the steering system.

D7484-1

2. Bleeding the steering system

WARNING:
Do not allow hydraulic fluid to come into contact with your skin. Wear the protective nitrile gloves provided when working with hydraulic fluid.

Connecting the autopilot pump will introduce air into the steering system, making it feel 'spongy' and 'lumpy' to operate. To return the steering system to smooth operation, use the procedure given here to bleed the air from the system.

Bleed procedure, sheet 1

2. Top up helm pump with hydraulic fluid

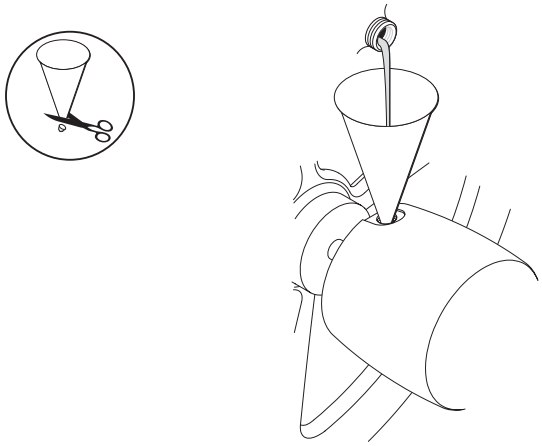

2. Loosen autopilot pump bleed screw 2 full turns

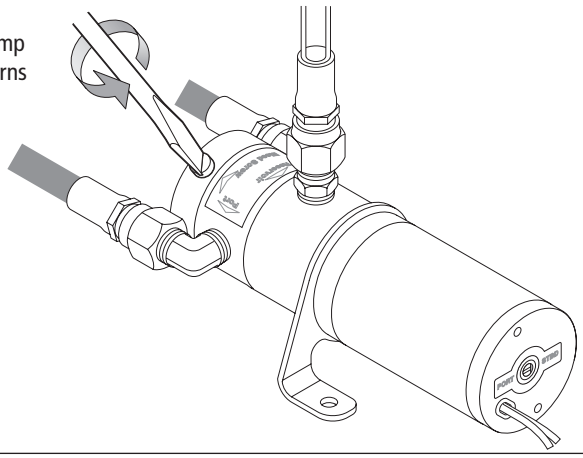

Bleed procedure, sheet 2

3. Using a suitable screwdriver, turn the autopilot pump shaft so that the flat on the shaft is toward the PORT side of the pump

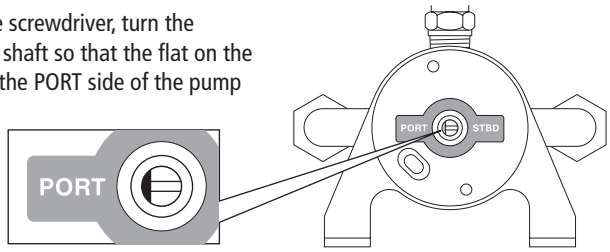

4. SLOWLY turn the wheel counter-clockwise and observe the bubbles in the transparent tube. Keep the helm pump reservoir topped up while doing this. Keep turning the wheel counter-clockwise until there are no more bubbles i.e. so the hydraulic fluid in the transparent tube is clear.

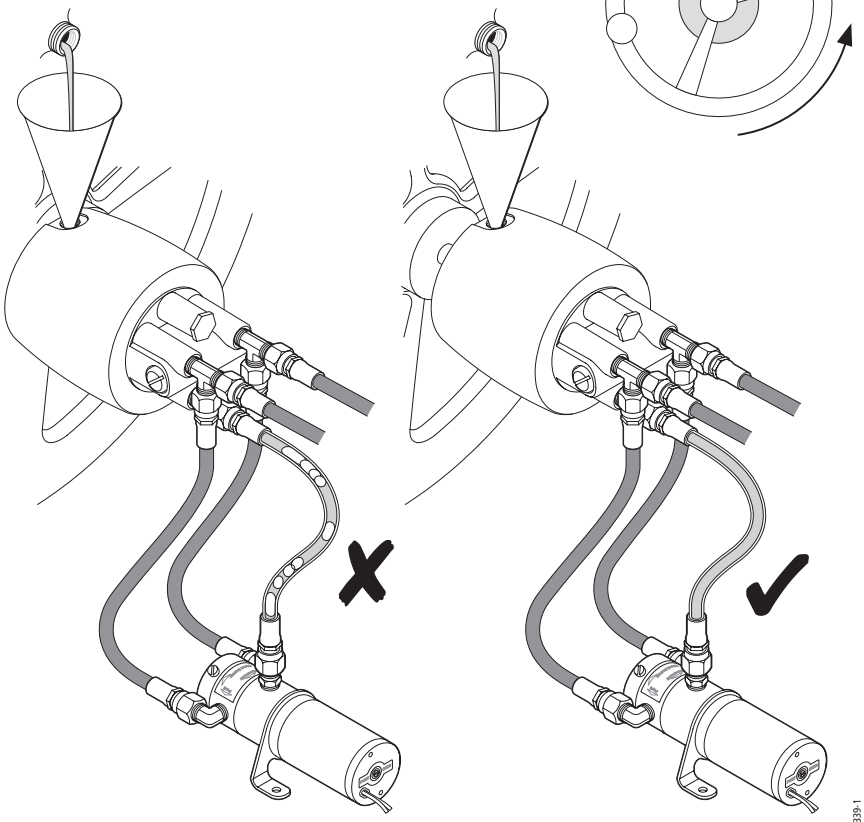

Bleed procedure, sheet 3

5. Using a suitable screwdriver, turn the autopilot pump shaft so that the flat on the shaft is toward the starboard (STBD) side of the pump

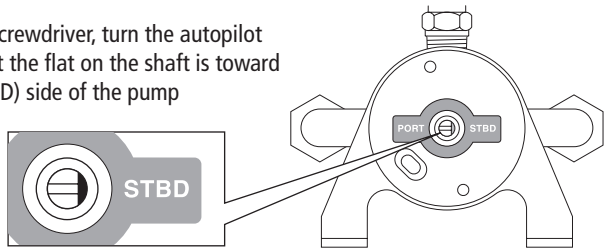

6. SLOWLY turn the wheel clockwise and observe the bubbles in the transparent tube. Keep the helm pump reservoir topped up while doing this. Keep turning the wheel counter-clockwise until there are no more bubbles i.e. so the hydraulic fluid in the transparent tube is clear.

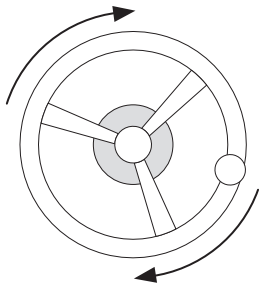

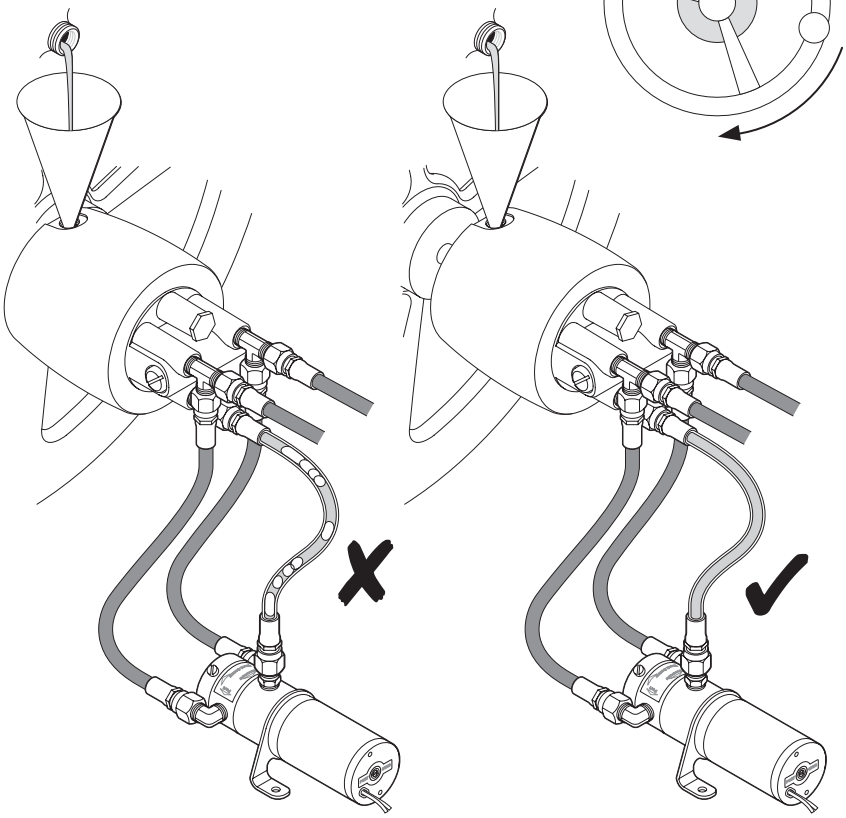

D7337-1

Bleed procedure, sheet 4

7. Top up the hydraulic fluid.

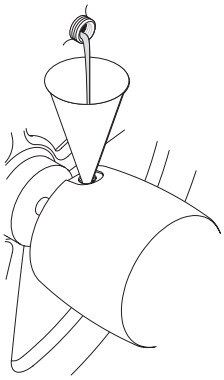

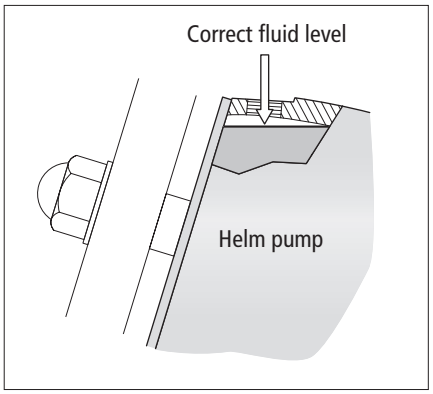

8. Turn the autopilot pump bleed screw, fully clockwise, and hand-tighten it.

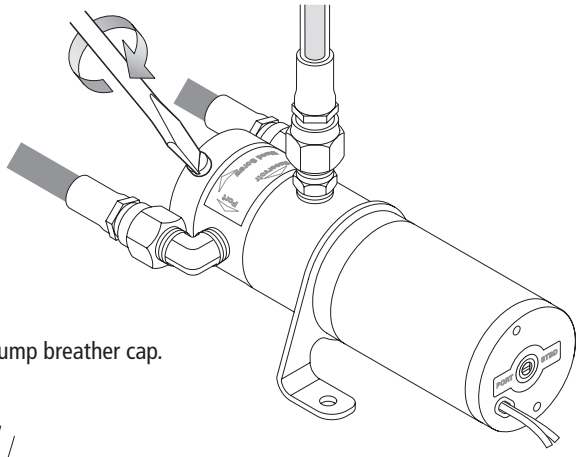

9. Replace the helm pump breather cap.

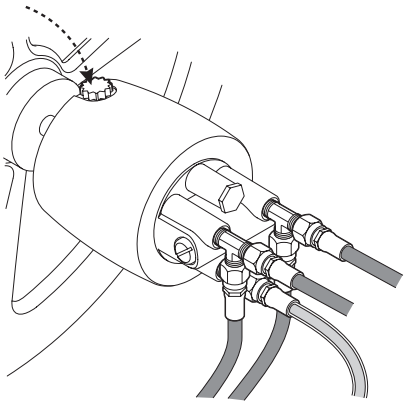

This completes the bleed procedure.
Now secure the pump.

D7486-1

3. Securing the pump

Securing the pump

1. Place the pump at the intended location and mark holes for the fixing screws.

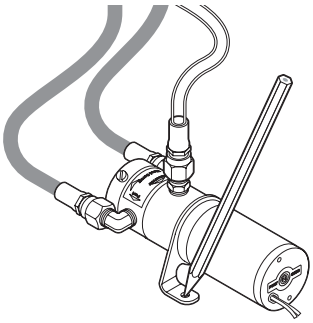

2. Drill two 1/8" (3.4 mm) pilot holes for the fixing screws

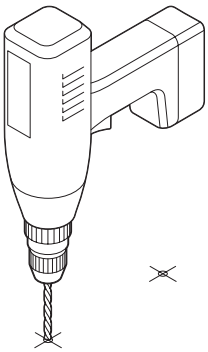

3. Countersink pilot holes to prevent damage to the mounting surface.

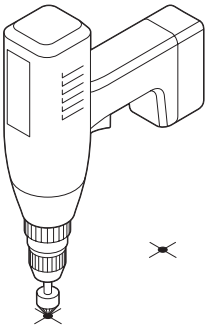

4. Slide the anti-vibration mounts onto the pump bracket feet, then secure the pump with the screws provided.

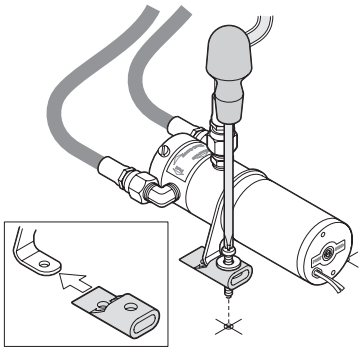

The autopilot pump should now be secure.
Now fit the course computer.

D7488-1

4. Fitting the course computer

Securing course computer

1. Mark holes for fixing screws.

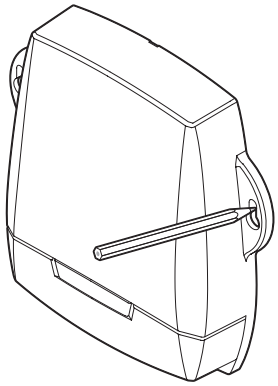

2. Drill two 1/82" (3.4 mm) pilot holes for fixing screws

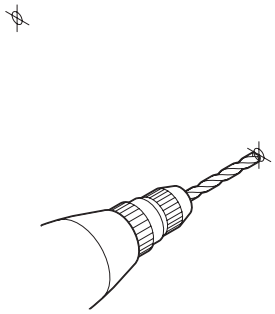

3. Countersink pilot holes to prevent damage to the mounting surface.

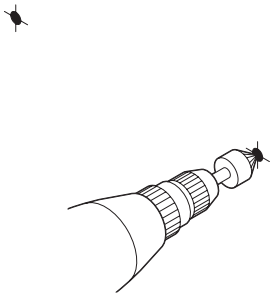

4. Partially screw in the screws provided, then slot the course computer onto the screws, and tighten screws.

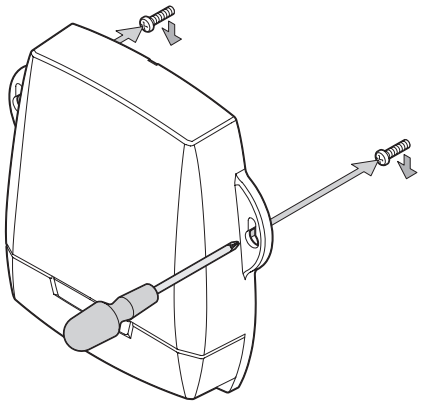

The course computer is now secure.

D7338-1

5. Fitting miscellaneous items

Buzzer

Locating

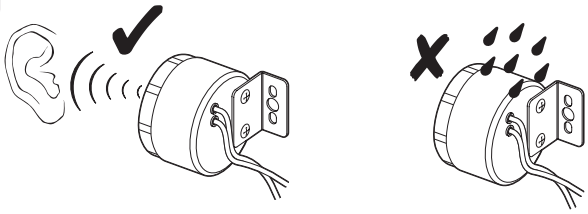

Securing

1. Mark holes for fixing screws.

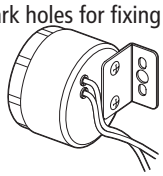

2. Drill two 1/8" (3.4 mm) pilot holes.

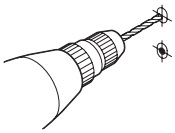

3. Countersink pilot holes to prevent damage to the mounting surface.

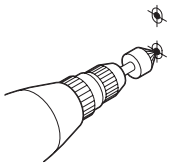

4. Secure the buzzer with the screws provided.

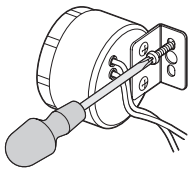

D7607-1

Fitting batteries in S100 Remote

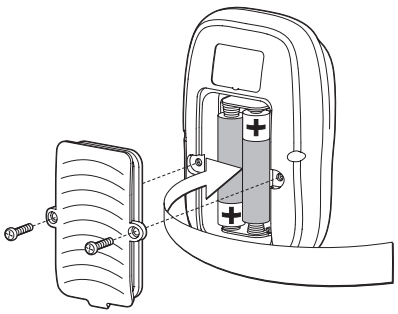

2 x AAA batteries (supplied).

When replacing, use only high-quality alkaline, AAA size batteries.

D7504-2

Fitting S100 Remote cradle

At fixed position

1. Mark holes for the fixing screws.

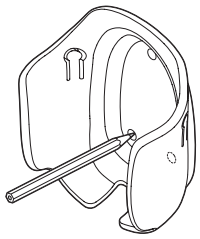

2. Drill three 1/8" (3.4 mm) pilot holes for the fixing screws

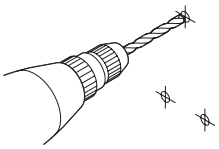

3. Countersink the pilot holes to prevent damage to the mounting surface.

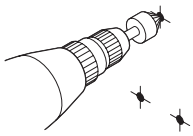

4. Secure the cradle.

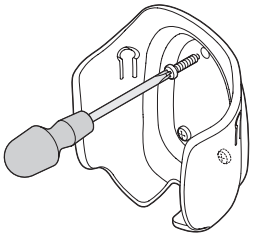

On belt clip

1.

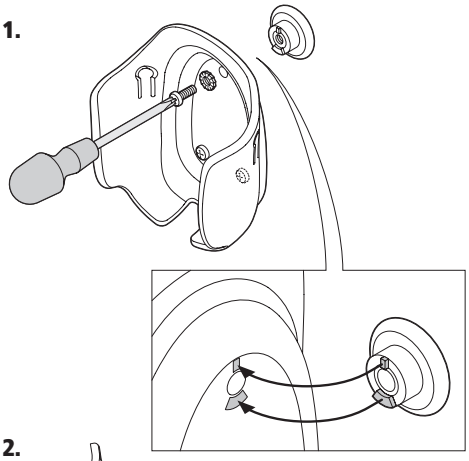

2.

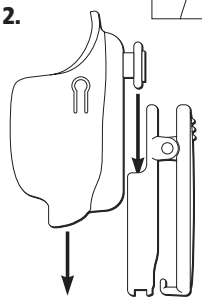

3.

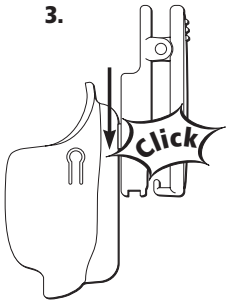

To separate cradle from clip

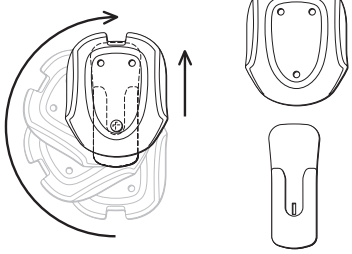

D7602-1

In-line power switch

Locating

Fit the in-line power switch in an easily-accessible location.

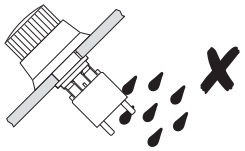

Securing

1.

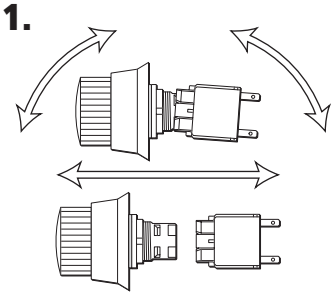

2.

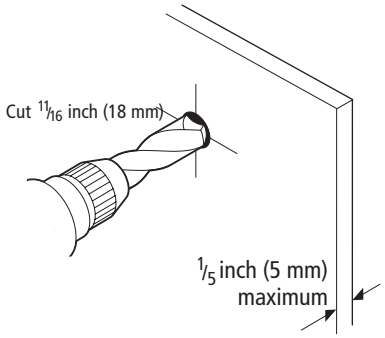

3.

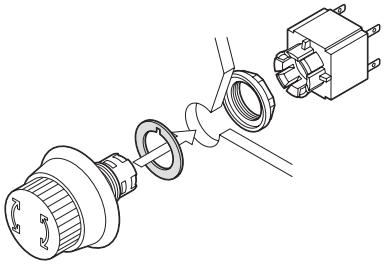

Ensure the protrusion on the switch barrel goes fully into the mounting hole.

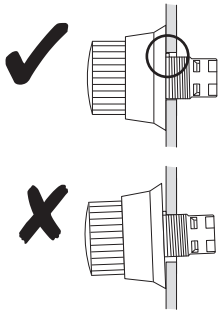

4.

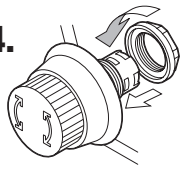

5.

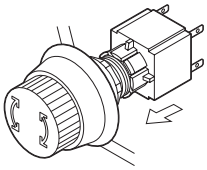

D7591-1

When all items have been fitted, connect up the system electrics.

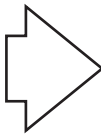

6. Electrical connections

Overview

Summary

WARNING:
Before making electrical connections to any part of the S1000 system, ensure the power source for the system is switched off.

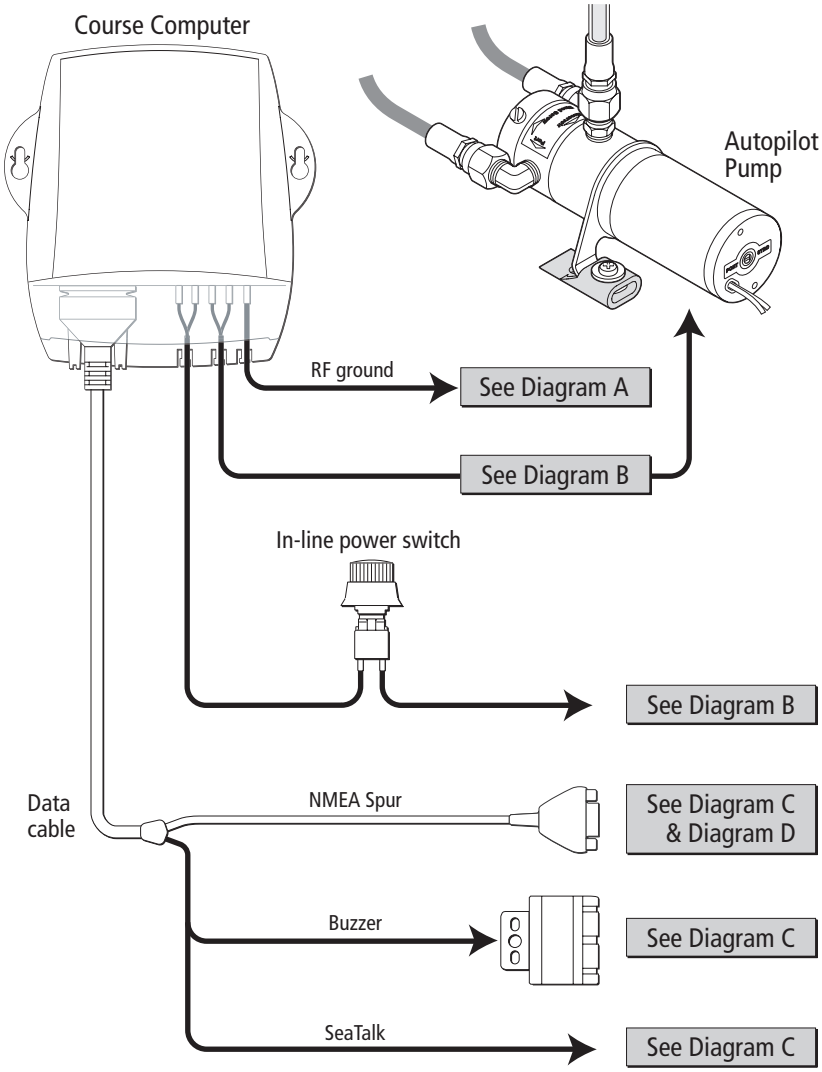

Connecting wires

When you need to join thin, data wires, use the Scotchlock connectors provided.

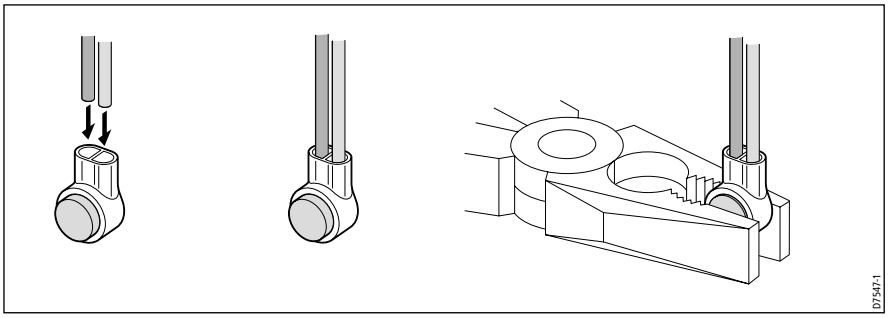

Procedures

Diagram A: Connecting RF ground - preferred method

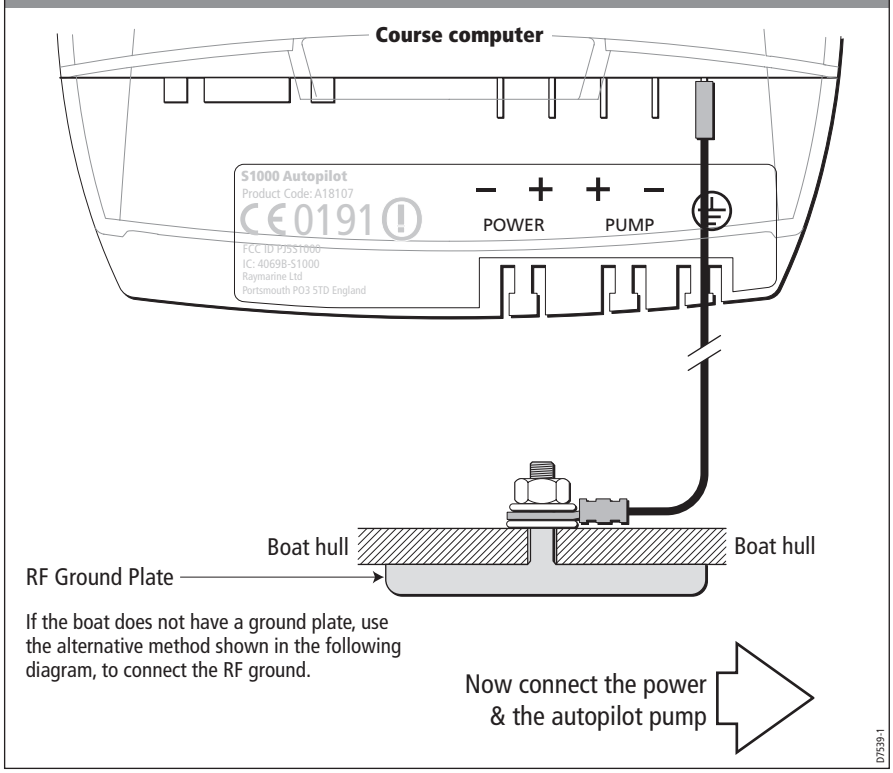

Connecting RF ground - alternative method

Note: Use this method of connecting the ⏚ terminal, ONLY if the boat does not have an RF grounding plate.

Do NOT connect the ⏚ terminal to any other point.

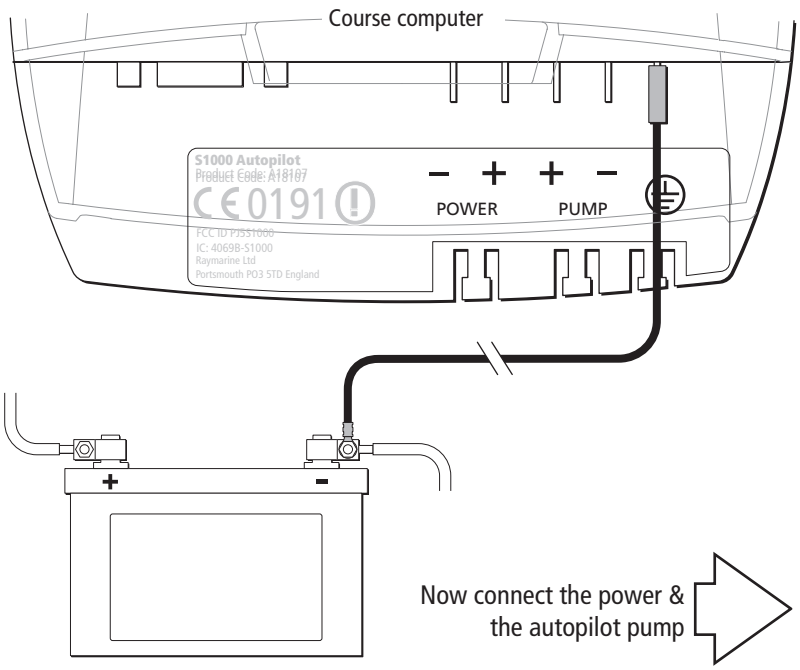

Diagram B: Connecting power & autopilot pump

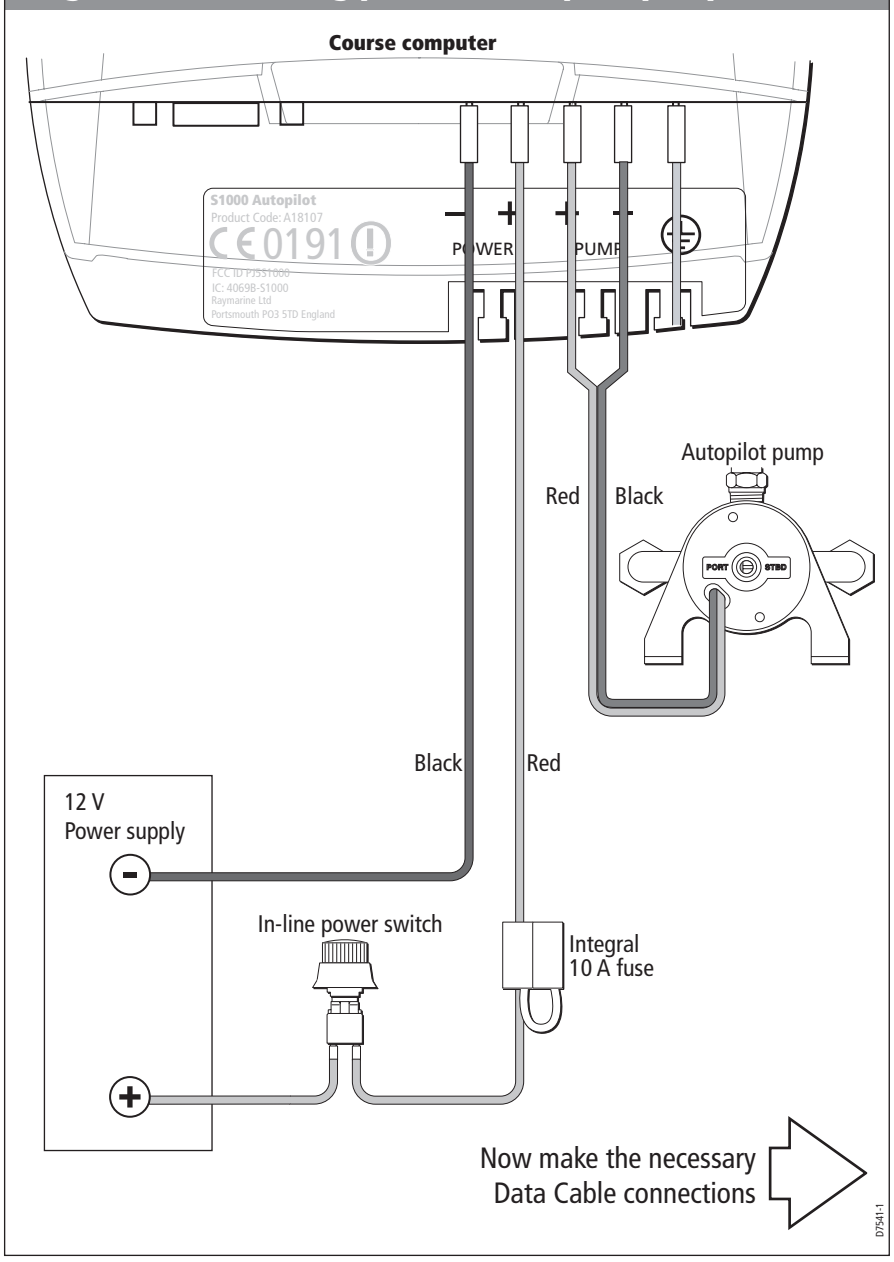

Diagram C: Connecting the Data Cable

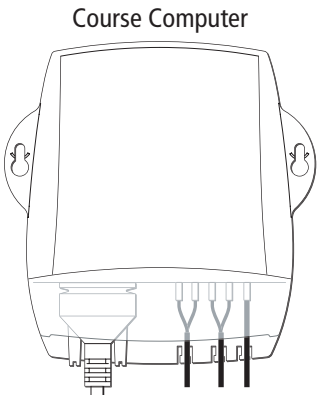

GPS requirement

The S1000 must receive GPS information, to function correctly. Use the Data Cable supplied, to connect the Course Computer to a GPS, using either of the following methods:

1. To a Raymarine GPS via SeaTalk connections.
2. To a Raymarine GPS via NMEA spur.
3. To a non-Raymarine GPS via NMEA spur.

Data cable

When connecting NMEA data from an external source, always connect via the NMEA spur on the Data Cable. Do NOT connect NMEA data from an external source directly to the connector on the Course Computer.

For details of the NMEA Spur connections, refer to **Diagram D**

Each time power is applied to an S1000 Autopilot connected to a Raymarine GPS (via NMEA or SeaTalk), the S1000 will set the GPS filtering to WEAK.

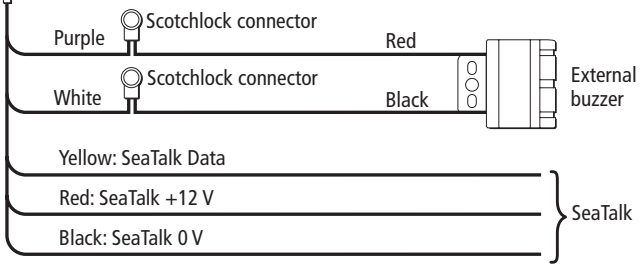

When you have completed the electrical connections, secure the wires at the Course Computer

D7549-1

Diagram D: NMEA connections

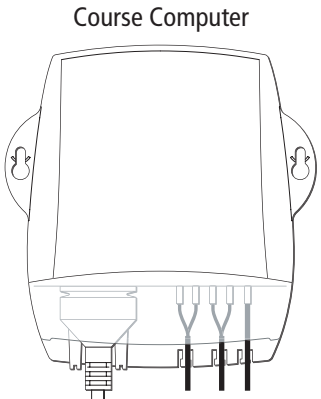

Using with Raymarine GPS

If a Raymarine GPS (such as the Raystar 120 or 125) is to be connected to the S1000 Autopilot via NMEA, the **NMEA in** and **out, +ve** and **-ve** lines must all be correctly connected.

Each time power is applied to an S1000 Autopilot connected to a Raymarine GPS (via NMEA or SeaTalk), the S1000 will set the GPS filtering to WEAK.

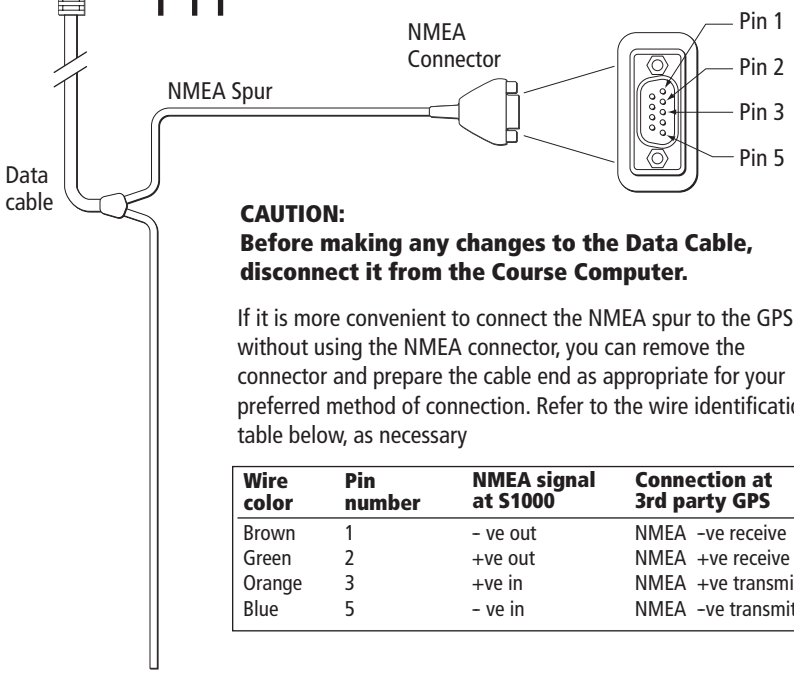

CAUTION:
Before making any changes to the Data Cable, disconnect it from the Course Computer.

If it is more convenient to connect the NMEA spur to the GPS without using the NMEA connector, you can remove the connector and prepare the cable end as appropriate for your preferred method of connection. Refer to the wire identification table below, as necessary

Wire color	Pin number	NMEA signal at S1000	Connection at 3rd party GPS
Brown	1	– ve out	NMEA –ve receive
Green	2	+ve out	NMEA +ve receive
Orange	3	+ve in	NMEA +ve transmit
Blue	5	– ve in	NMEA –ve transmit

When you have completed the electrical connections, secure the wires at the Course Computer

D7596-1

Secure wires

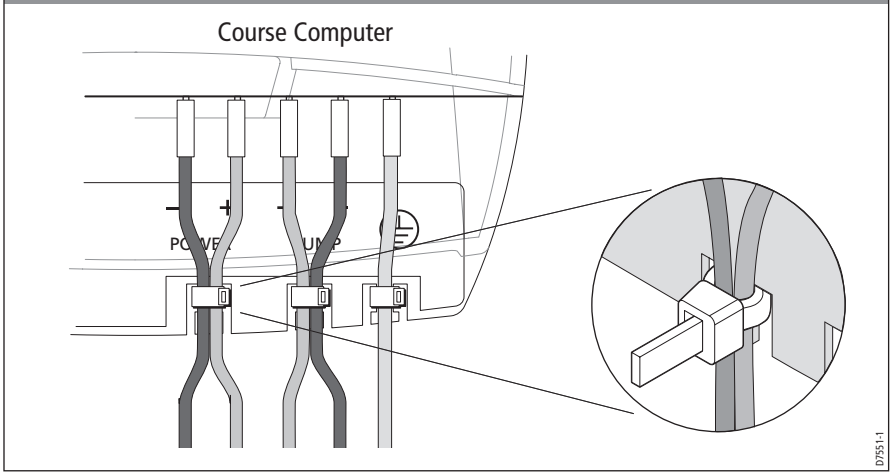

This completes the installation procedure. Now carry out the *Post installation* procedures (below).

7. Post installation

When you have completed the installation of your S1000 Autopilot, use the following procedures to:

- Check the steering operation.
- Check the system for leaks.
- Switch on the autopilot, then use the commissioning procedure, to correctly set up the autopilot.

Steering operation

Turn the wheel from hard over port, to hard over starboard. If the steering operates satisfactorily, proceed with the other post installation checks.

If the steering feels uneven and/or less responsive than it was before you installed your S1000 Autopilot, you may need to bleed the entire steering system. To do this, use the purge procedure at the following web address:

http://www.seastarsteering.com/OUTBOARD/oboard.htm?../FILL_PURGE/FillPurge.htm&1

Checking for leaks

Checking for leaks (sheet 1)

1. Ensure all hydraulic joints are secure, then turn the wheel to port. When the hard over point is reached, continue turning to port to pressurize the port lines, until the safety valve releases. At this point, the fluid in the port lines will be at maximum pressure and the wheel has a 'lumpy' feel when turned to port.

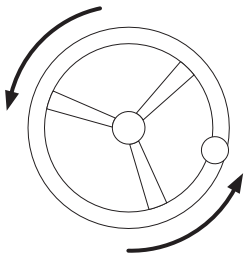

2. With the port lines at maximum pressure, check the port lines for leaks, paying particular attention to the joints.

If a leak occurs, turn the wheel to starboard to release the pressure, then repair the leak and repeat step 1.

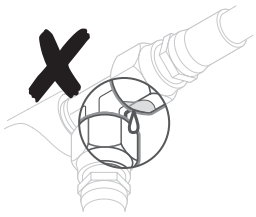

D7502-1

Checking for leaks (sheet 2)

3. Turn the wheel to starboard, and when the hard over point is reached, continue turning to starboard to pressurize the starboard lines, until the safety valve releases. At this point, the fluid in the starboard line will be at maximum pressure and the wheel has a 'lumpy' feel when turned to starboard.

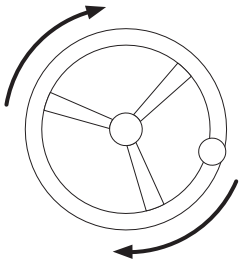

4. With the starboard lines at maximum pressure, check the starboard lines for leaks, paying particular attention to the joints.
If a leak occurs, turn the wheel to port to release the pressure, then repair the leak and repeat step 3.

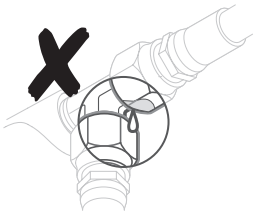

5. After 24 hours, re-check the steering system to ensure there are still no hydraulic fluid leaks.

D7550-1

Switch on & commissioning

WARNING:
Before switching on power to the course computer, make sure that personnel are clear of the steering gear and that the boat is securely moored.

1. Switch on power to the S1000 system.
2. Carry out the commissioning procedure.

Commissioning using Autolearn - sheet 1

WARNING:

The Autolearn process takes your boat through a series of zig-zag maneuvers, so a significant amount of CLEAR SPACE is required in front of your boat. Do NOT start Autolearn unless this space is available.

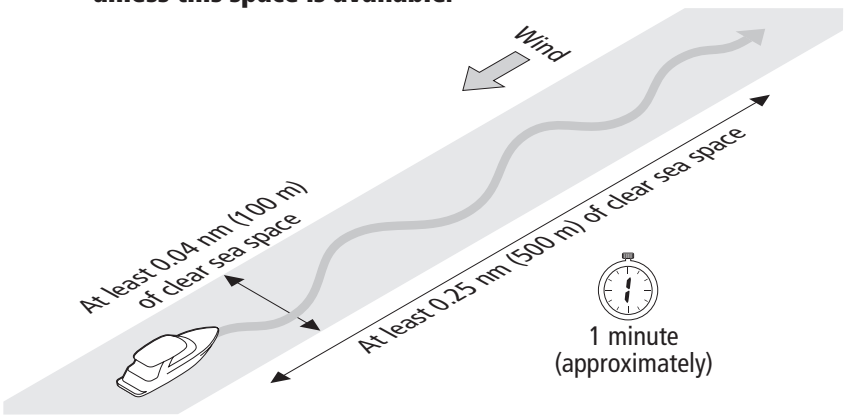

To regain control of the boat at any time during Autolearn, press STANDBY.

Before you use the autopilot, run the inbuilt Autolearn facility to set up the autopilot for your boat:

1. At the S100 remote, hold down **STANDBY** for 2 seconds, to enter Pilot Setup mode — Pilot Setup
2. Press **MODE** the necessary number of times to display AUTOLEARN. — AUTOLEARN
3. Press **PILOT** to initiate Autolearn. — CLEAR TO MANEUVER?
4. Ensure you have sufficient sea room to carry out the Autolearn, then steer straight ahead and set the speed between 8 and 15 knots. Ensure the boat is OFF the plane.

Continue on sheet 2

D7508-1

Commissioning using Autolearn - sheet 2

5. Press **PILOT** to begin. Your boat will then make a series of zig-zag turns and the S100 display will show the Autolearn step numbers (counting up). A typical Autolearn process takes from 7 to 27 steps.

LEARNING...
STEP 1

6. At the end of a successful Autolearn process, the display shows **LRN PASS**. When this occurs, hold down **STANDBY** for 2 seconds, to save the Autolearn values and enter autopilot Standby Mode.

LRN PASS

If an Autolearn process fails, the display shows **LRN FAIL**. Press and release **STANDBY** to return to Autolearn and repeat the process.

LRN FAIL

D7557-1

Specifications

System

Approvals: FCC, EMC, CE, IC

Autopilot pump

Voltage:10.5 V dc to 13.8 V dc
Current consumption: 4 A at 100 psi (69 kP), 7 A at 500 psi (3449 kP)
Dimensions: 6.5 in (165 mm) x 2.5 in (65 mm) x 3.2 in (82 mm)
Weight: 3 lbs (1.4 kg)

Course computer

Voltage: 12 V dc
Current consumption: 10 A, maximum
4 A, nominal
Dimensions: 6.5 in (165 mm) x 6.7 in (170 mm) x 1.73 in (44 mm)
Data In/Out: SeaTalk, NMEA 0183

S100 Remote

Voltage: 3 V, supplied by two internal, 'AAA' batteries.
Dimensions: S100 Remote only: 101 mm x 60.5 mm x 35 mm
Remote in cradle:103 mm x 66 mm x 44 mm
Waterproofing: IPX 6

Hydraulic fittings

Tapered thread: ¼ NPT (National Pipe Thread)
Hose connection thread: $^{9}/_{16}$ UNEF (Unified Extra Fine)

Hydraulic fluid

Recommended Types: Canmet Steering Fluid. High VI, ISO 15 Hydraulic Oil
SeaStar/BayStar Marine Steering Fluid

Other suitable Types: Texaco HO15
Shell Aero 4
Esso Univis N15
Chevron Aviation Fluid A
Mobil Aero HFA
Fluids meeting MIL H5606 specifications

Safety notices

WARNING: Product installation & operation
This equipment must be installed and operated in accordance with the Raymarine instructions provided. Failure to do so could result in personal injury, damage to your boat and/or poor product performance.

WARNING: Electrical safety
Make sure you have switched off the power supply before you start installing this product.

Information

To the best of our knowledge, the information in this guide was correct when it went to press. However, Raymarine cannot accept liability for any inaccuracies or omissions it may contain.

In addition, our policy of continuous product improvement may change specifications without notice. Therefore, Raymarine cannot accept liability for any differences between the product and this guide.

EMC Installation Guidelines

All Raymarine equipment and accessories are designed to the best industry standards for use in the recreational marine environment.

Their design and manufacture conforms to the appropriate Electromagnetic Compatibility (EMC) standards, but correct installation is required to ensure that performance is not compromised. Although every effort has been taken to ensure that they will perform under all conditions, it is important to understand what factors could affect the operation of the product.

The guidelines given here describe the conditions for optimum EMC performance, but it is recognized that it may not be possible to meet all of these conditions in all situations. To ensure the best possible conditions for EMC performance within the constraints imposed by any location, always ensure the maximum separation possible between different items of electrical equipment.

For **optimum** EMC performance, it is recommended that **wherever possible**:

- Raymarine equipment and cables connected to it are:
    - At least 3 ft (1 m) from any equipment transmitting or cables carrying radio signals e.g. VHF radios, cables and antennas. In the case of SSB radios, the distance should be increased to 7 ft (2 m).
    - More than 7 ft (2 m) from the path of a radar beam. A radar beam can normally be assumed to spread 20 degrees above and below the radiating element.
- The equipment is supplied from a separate battery from that used for engine start. Voltage drops below 10 V in the power supply to our products, and starter motor transients, can cause the equipment to reset. This will not damage the equipment, but may cause the loss of some information and may change the operating mode.
- Raymarine specified cables are used. Cutting and rejoining these cables can compromise EMC performance and must be avoided unless doing so is detailed in the installation manual.
- If a suppression ferrite is attached to a cable, this ferrite should not be removed. If the ferrite needs to be removed during installation it must be reassembled in the same position.

Suppression Ferrites

The following illustration shows typical cable suppression ferrites used with Raymarine equipment. Always use the ferrites supplied by Raymarine.

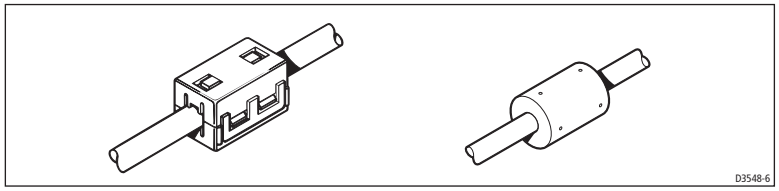

Connections to Other Equipment

If your Raymarine equipment is to be connected to other equipment using a cable not supplied by Raymarine, a suppression ferrite MUST always be attached to the cable near the Raymarine unit.

Raymarine UK Ltd,
Quay Point,
Northarbour Road
Portsmouth,
Hampshire PO6 3TD,
United Kingdom.
Tel: +44 (0) 23 9269 3611
Fax: +44 (0) 23 9269 4642
www.raymarine.com

Raymarine Inc,
22 Cotton Road,
Unit D, Nashua,
New Hampshire 03063-4219,
USA.
Tel: +1 603.881.5200
Fax: +1 603.864.4756
www.raymarine.com

Raymarine®
...world leaders in marine electronics.