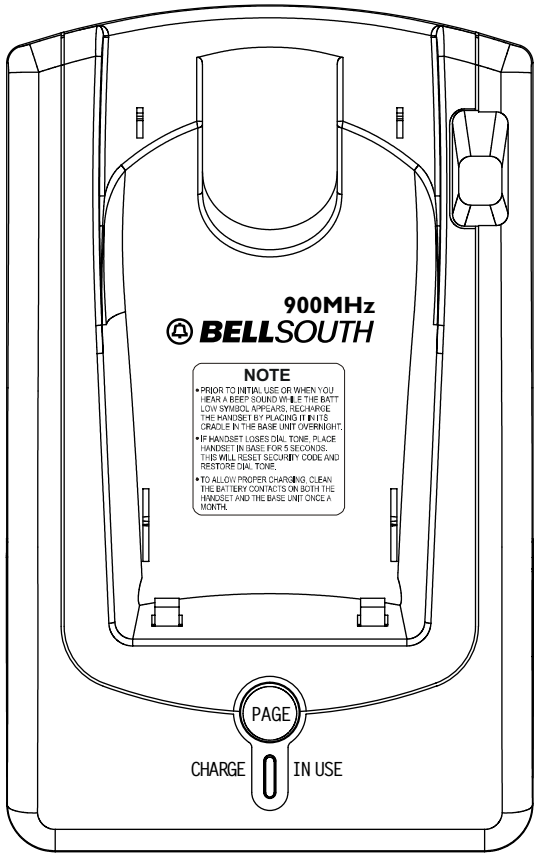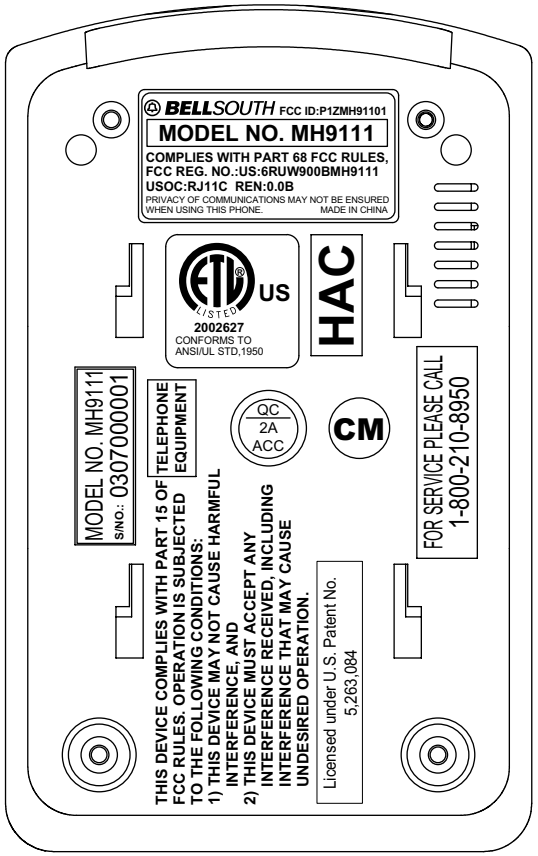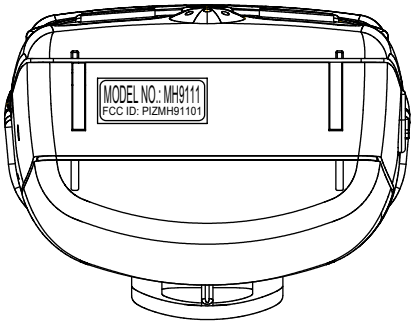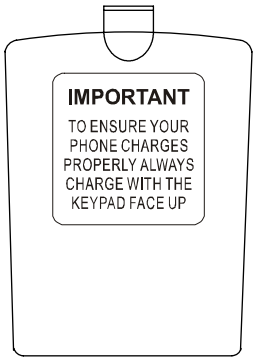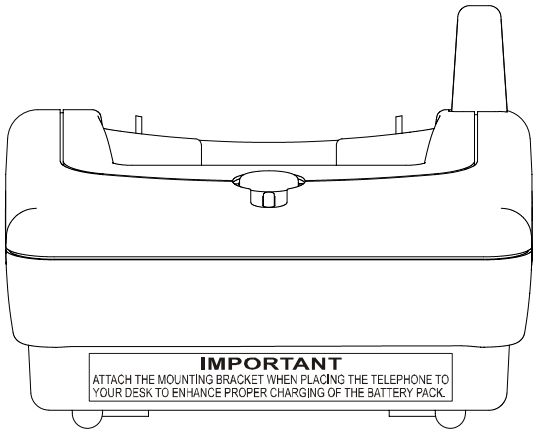MH9111BA LABELS' LOCATION
DESIGNED BY: Deng Ling
DATE : Feb/24/2003