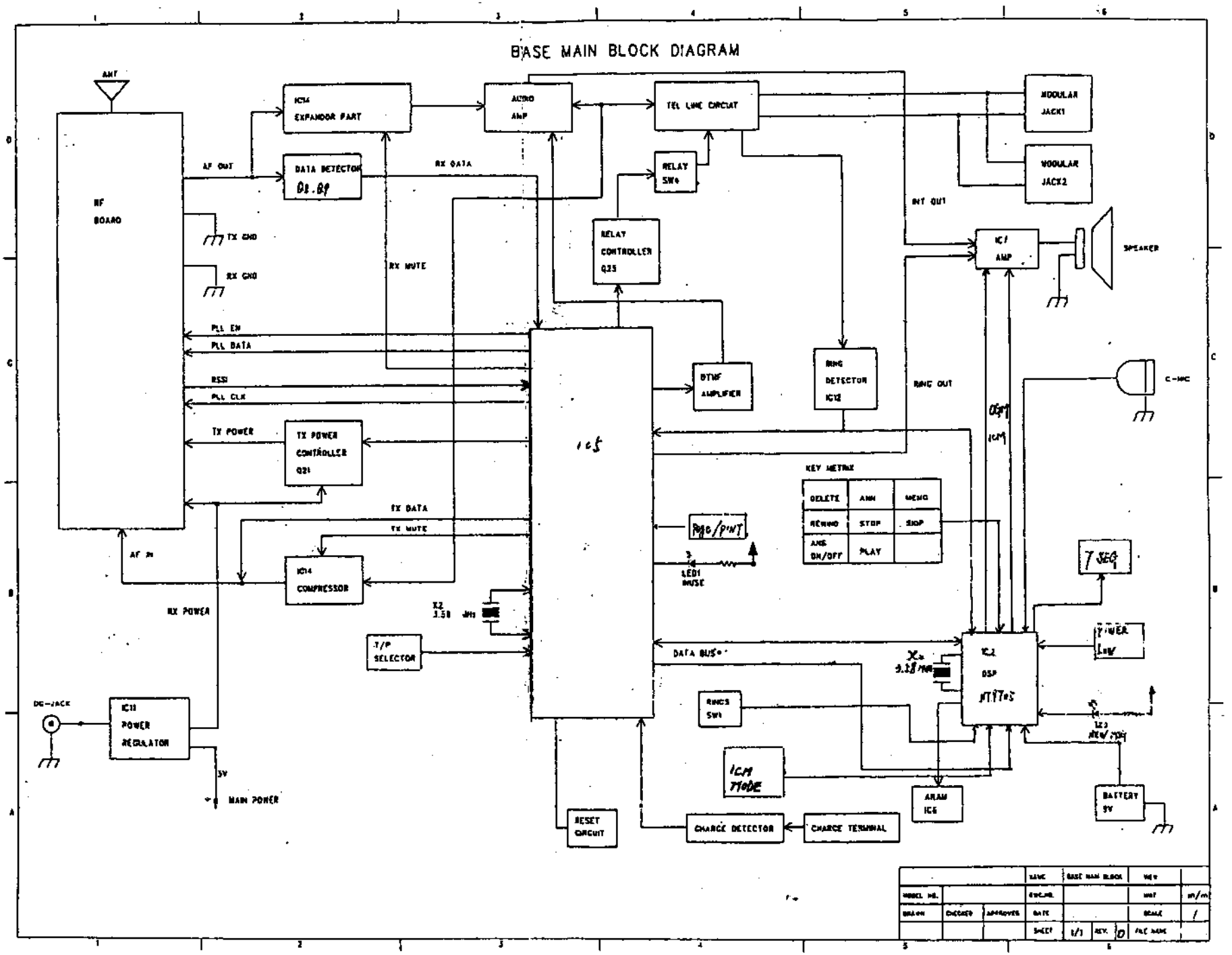BASE MAIN BLOCK DIAGRAM