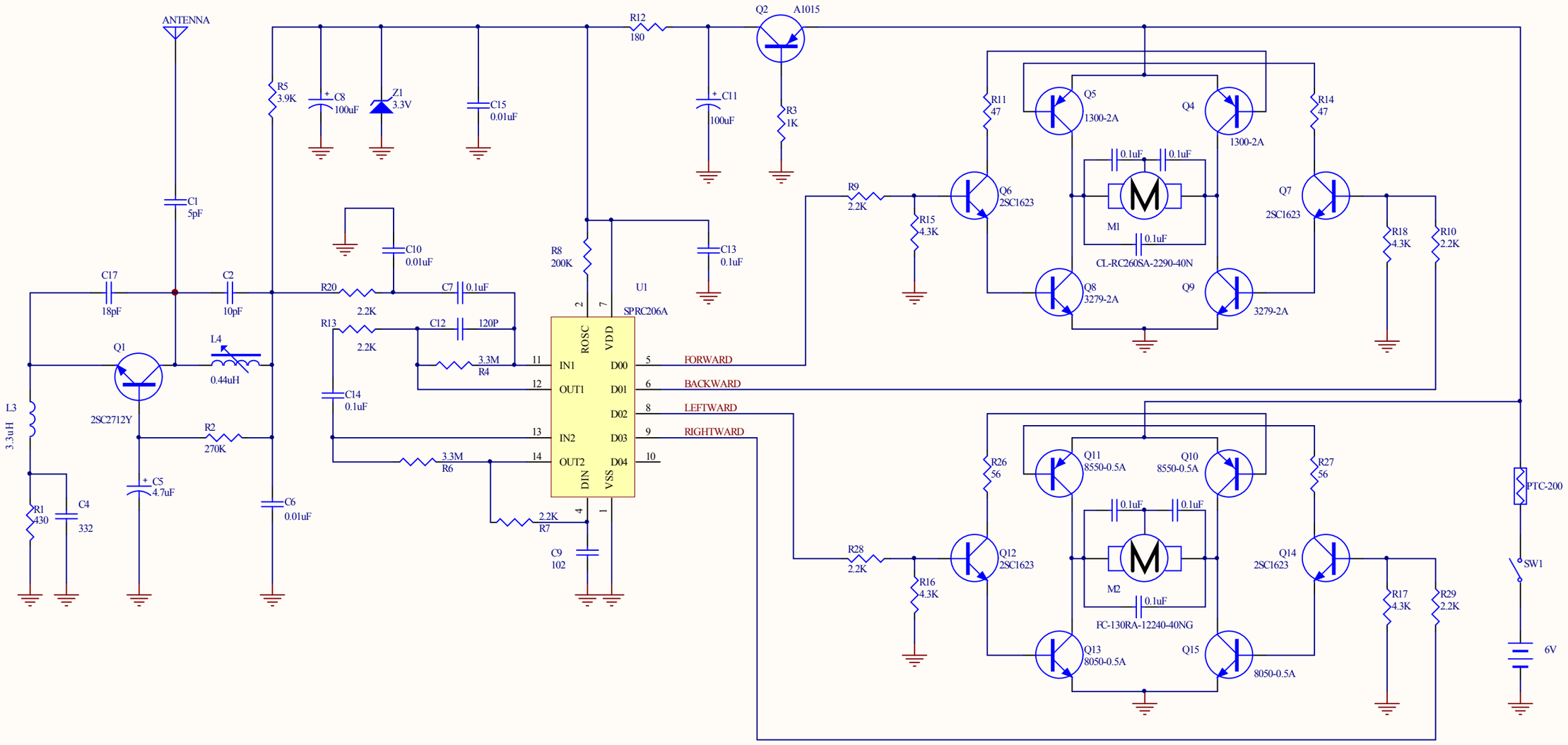

Remark: for international version, add PTC

the PCB is 20-75710200-1

Q4 Q5 Q8 Q9 must meet the current requirement

Title	RC FORD F-150 YELLOW	
Size	Number P0213 RX 49MHz FCC	Revision
Date: Sep. 21 2007		Sheet of
File:		Drawn By: