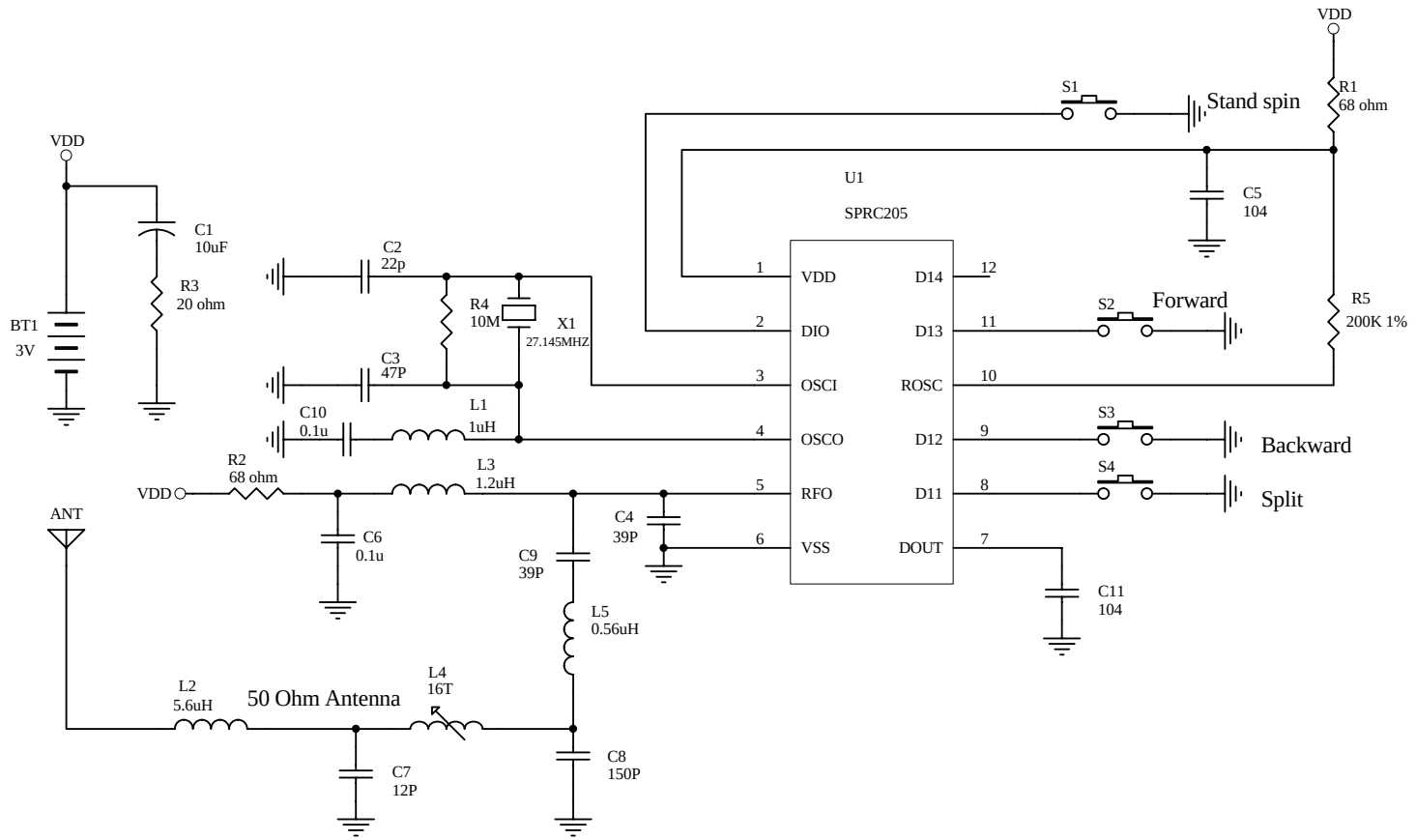

Title	K9817 27MHZ	
Size A4	Number	Revision 02
Date: 10-Aug-2006	Sheet of	
File: D:\hbpe42\..\K9817 TX 27MHZ (8-10).Sch	Drawn By:	