J7205
TX FCC 49.860MHz

TX SCHAMETIC

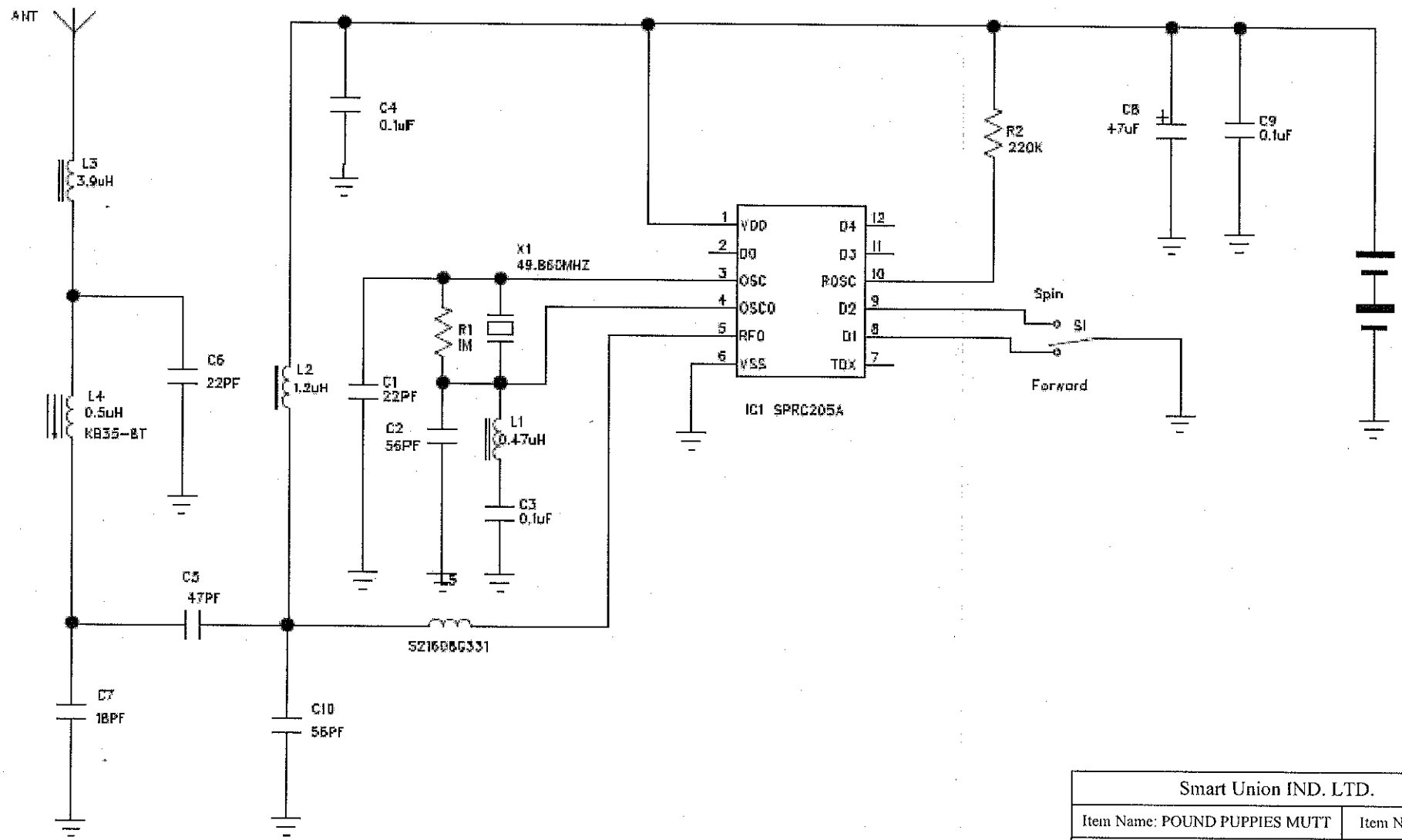

Smart Union IND. LTD.	
Item Name: POUND PUPPIES MUTT	Item No.: J7205
Prepared By: S.M. Lee, Simon	
Version. 01	Date: 04/07/2005