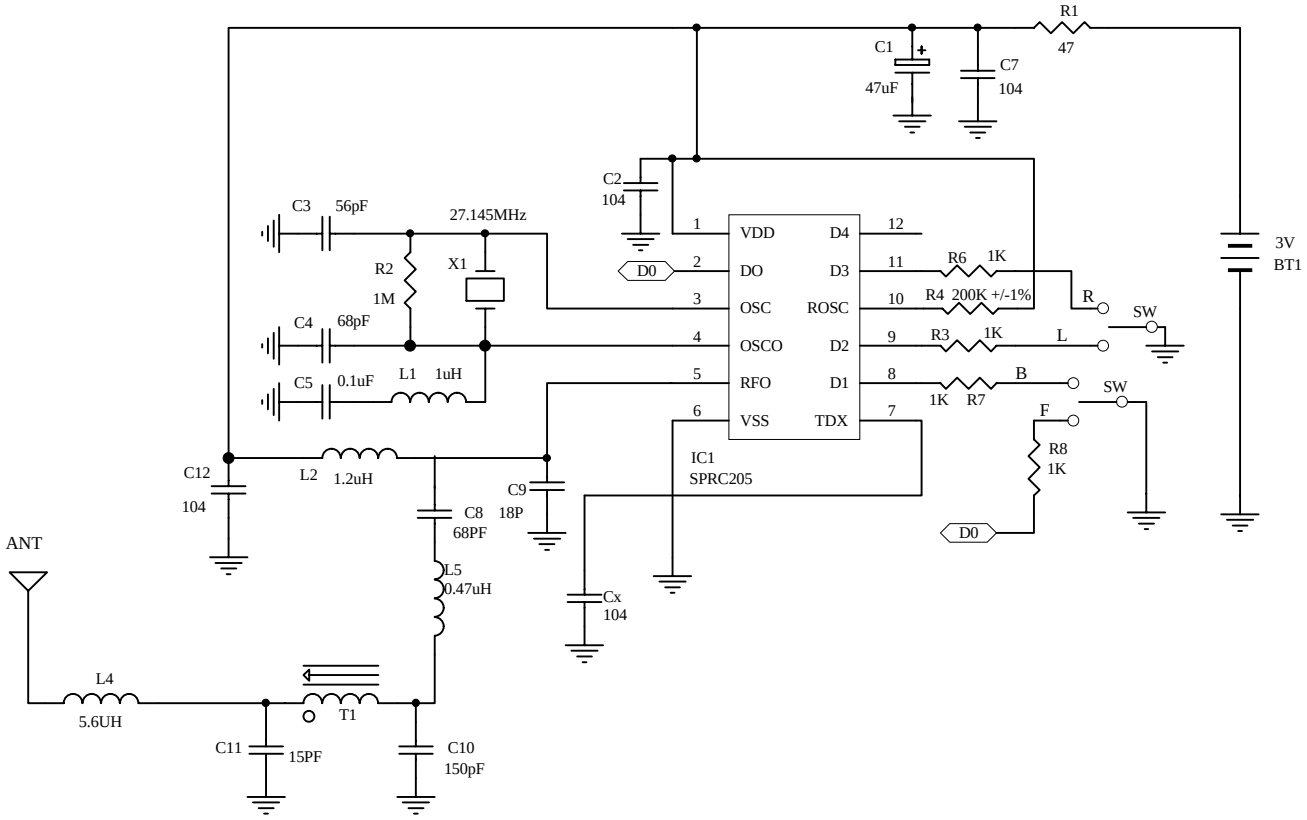

Title	G3474 TX(27M)		
Size A4	Number		Revision 05
Date:	16-May-2005	Sheet of	
File:	\\..\G3474TX05.sch	Drawn By:	