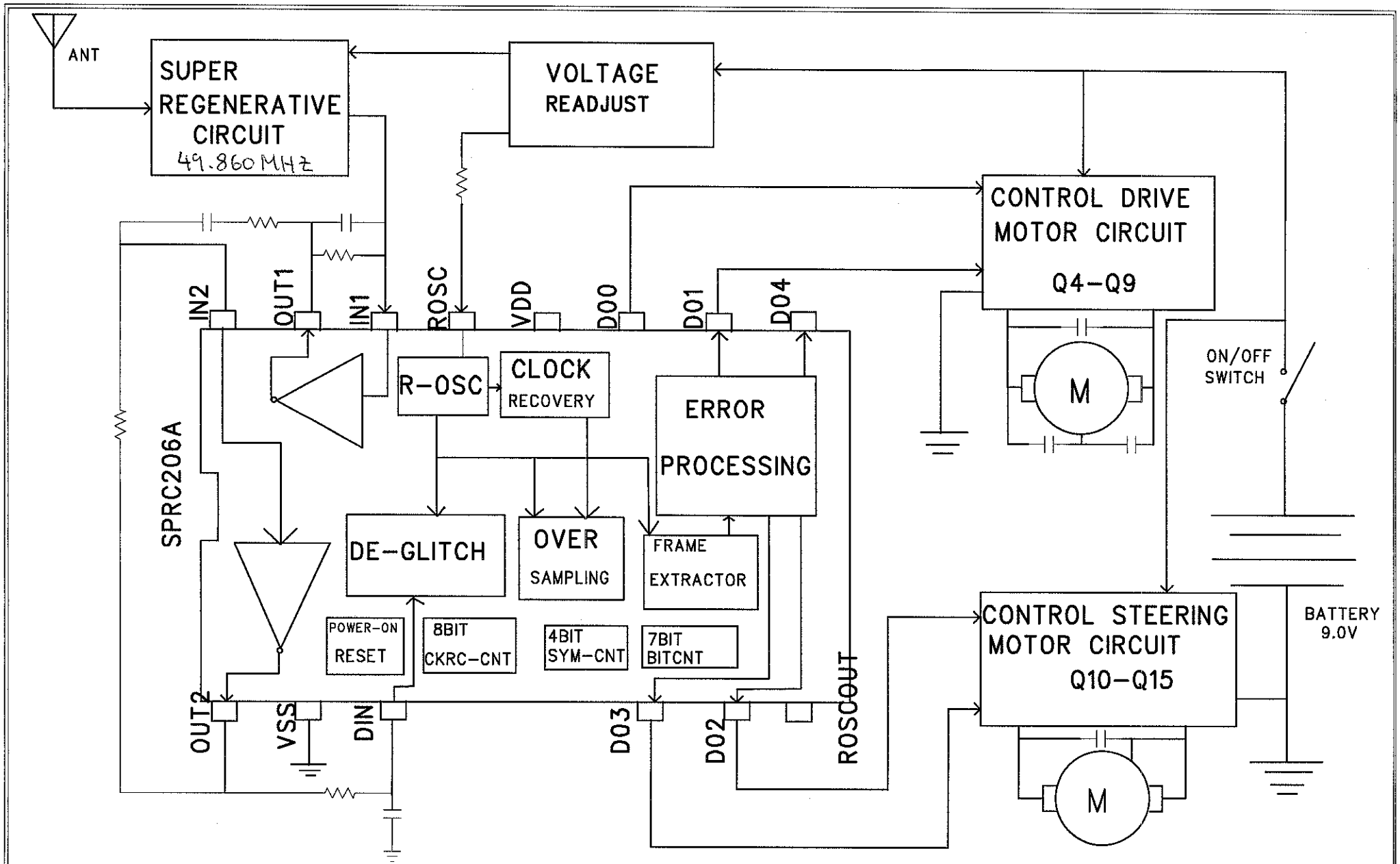

LUNG CHEONG	TITLE:	H2369-RX	DESIGN BY:	DRAWING BY:	APPROVED BY:	SHEET:
	FUNCTION:	RECEIVER		XIAO YUN		1 of 1
	DWG NO:			19-09-2005		

PDF 文件使用 "pdfFactory Pro" 试用版本创建 www.fineprint.com.cn