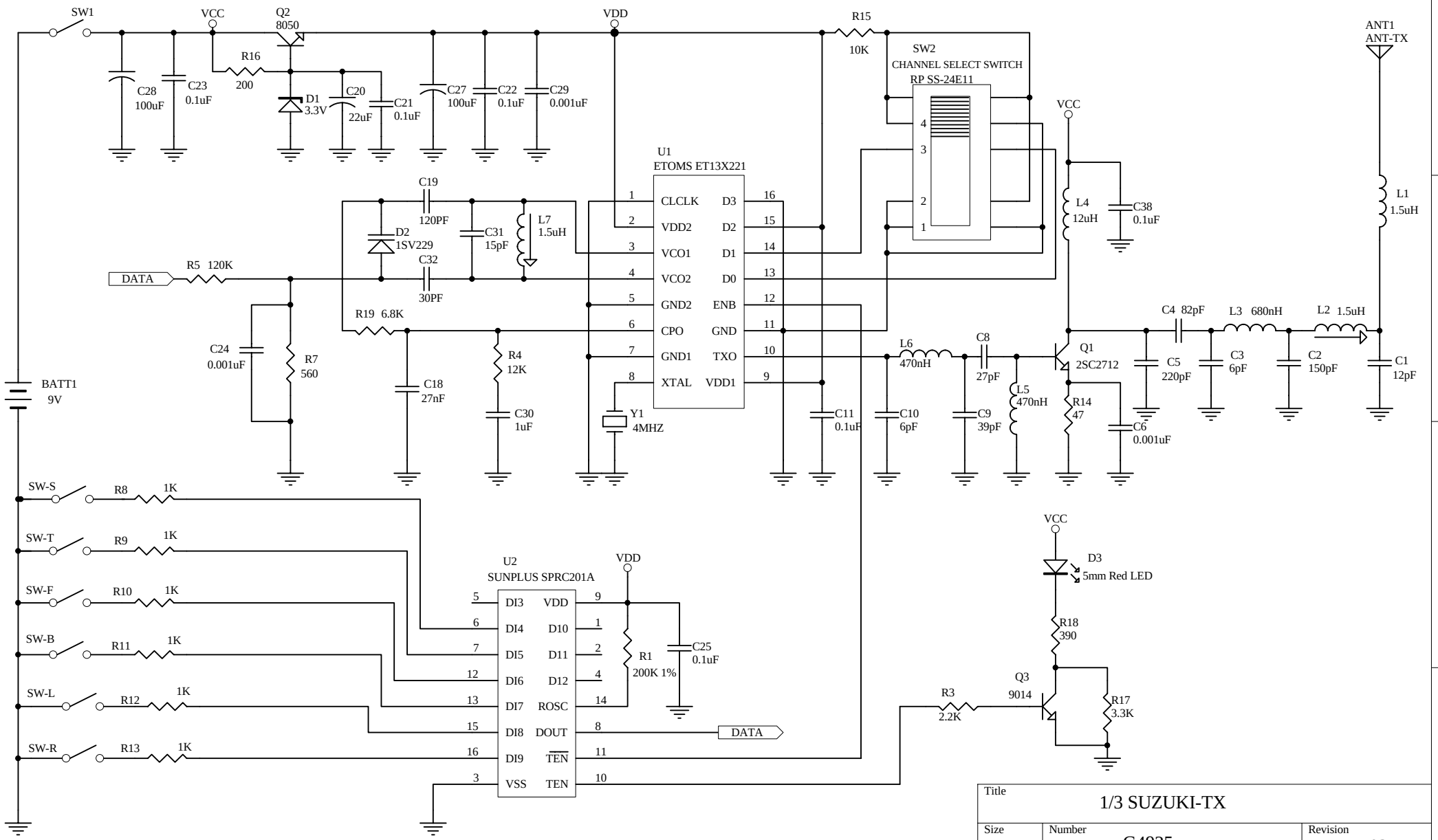

Title	1/3 SUZUKI-TX	
Size A4	Number G4925	Revision 03
Date: 8-Jul-2004	Sheet of	
File: \\Hbpe-panjxiong\D\Project\Product\G4925\G4925 FCC DOCUMENT\G4925 TX_FCC.DDB		