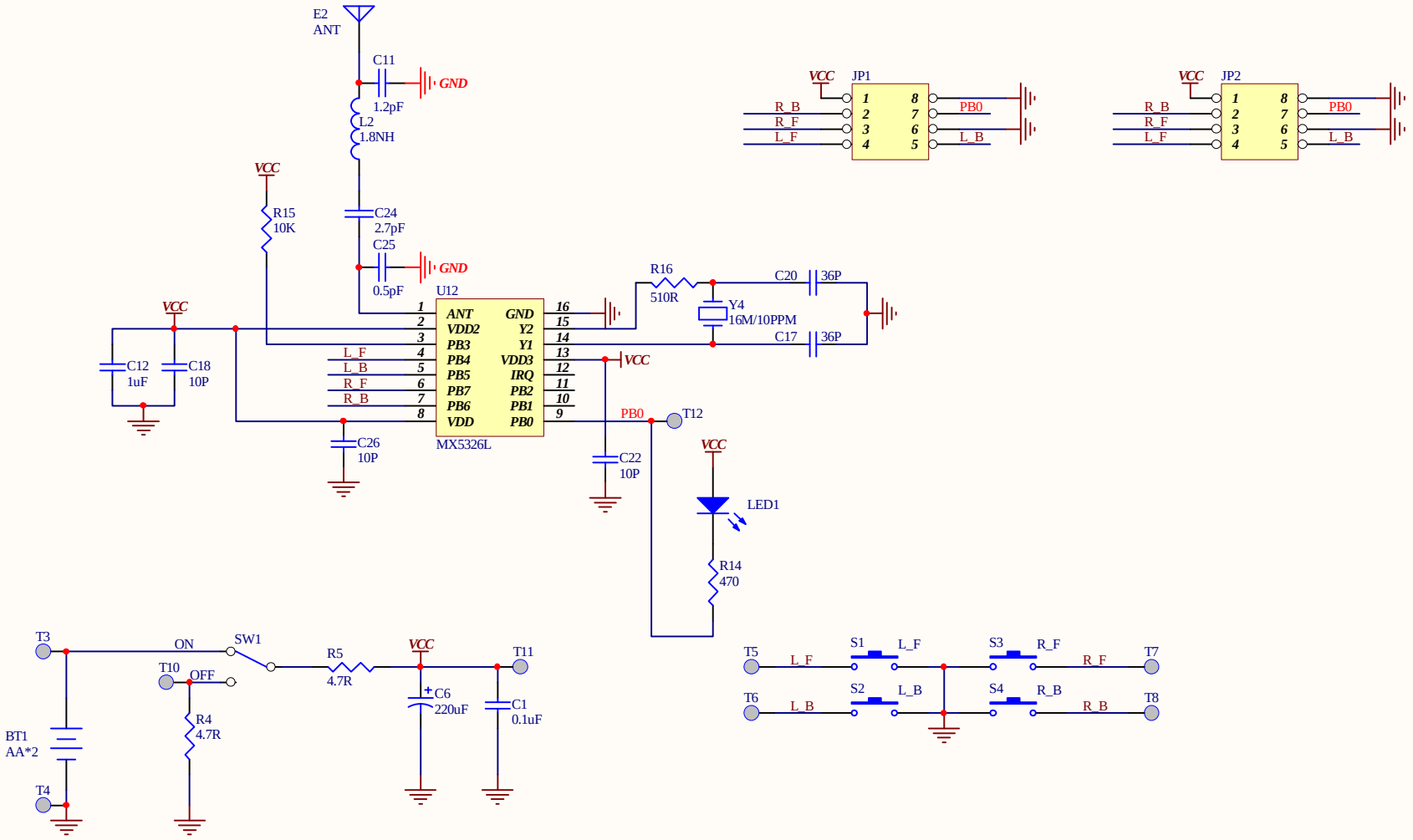

Confidential Property of Jetta Company Ltd.

Drawn By:	ZXH	Title	***2.4G TX***		***Jetta (China) Co. Ltd.***
Checked By:	RHB	Size: A4	Number: **DNR84**	Revision: 02	Corresponding PCB :
Approved By:	LLF	Date: 2016/3/14	Time: 下午 03:48:44	Sheet1 of 1	
		File: D:\Users\xhzhang02\zxh1\2015 project\DNR84\0022TX\DNR84+003+0022(02-00)\DNR84+003+0022 REV02.SchDoc			

JETTA COMPANY LIMITED