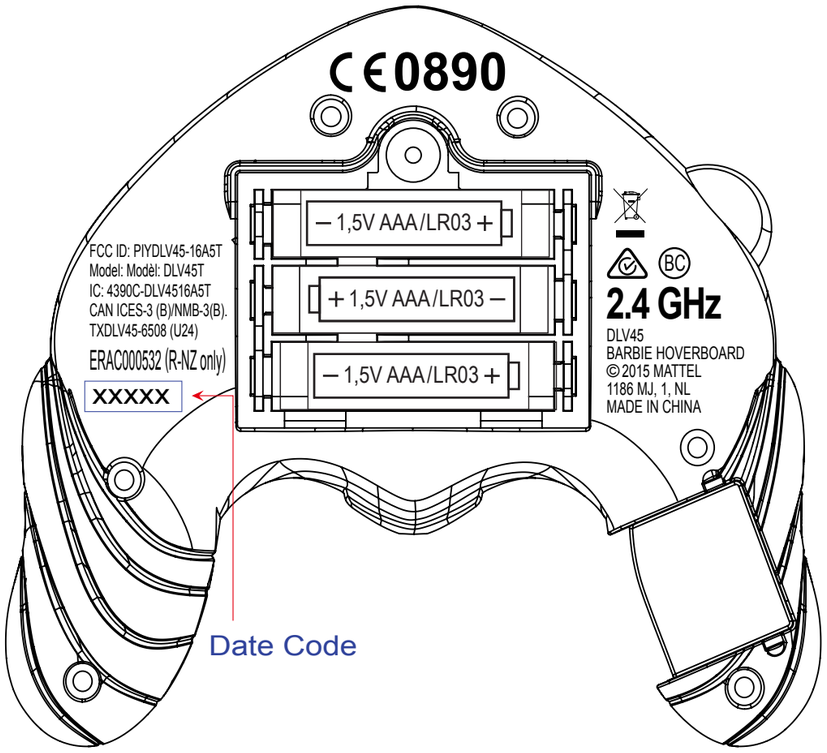
CE0890
– 1,5V AAA/LR03 +
+ 1,5V AAA/LR03 –
– 1,5V AAA/LR03 +
FCC ID: PIYDLV45-16A5T
Model: Modèl: DLV45T
IC: 4390C-DLV4516A5T
CAN ICES-3 (B)/NMB-3(B).
TXDLV45-6508 (U24)
ERAC000532 (R-NZ only)
XXXXX
2.4 GHz
DLV45
BARBIE HOVERBOARD
©2015 MATTEL
1186 MJ, 1, NL
MADE IN CHINA
Date Code

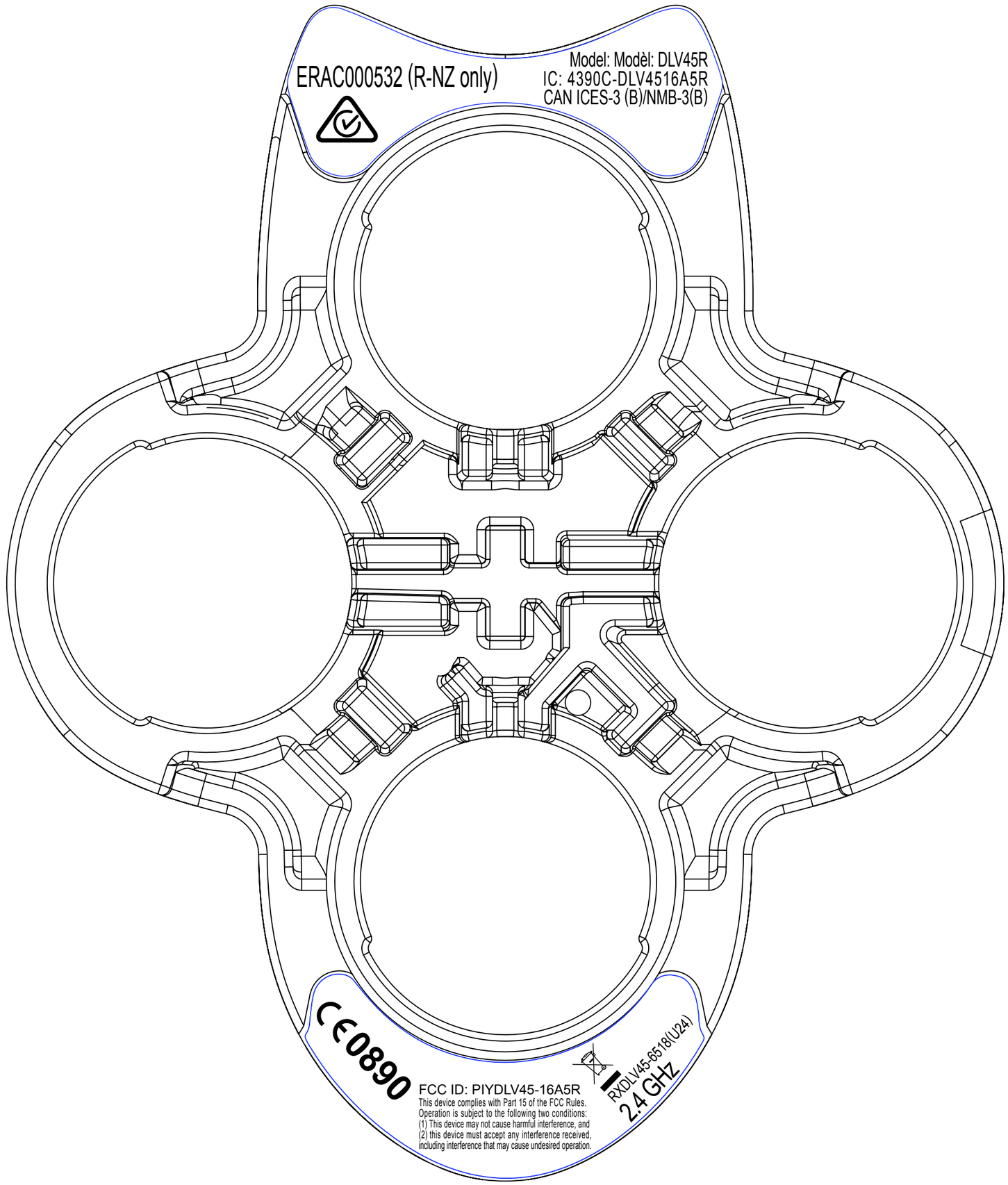
ERAC000532 (R-NZ only)
Model: Modèl: DLV45R
IC: 4390C-DLV4516A5R
CAN ICES-3 (B)/NMB-3(B)
CE0890
FCC ID: PIYDLV45-16A5R
This device complies with Part 15 of the FCC Rules.
Operation is subject to the following two conditions:
(1) This device may not cause harmful interference, and
(2) this device must accept any interference received,
including interference that may cause undesired operation.
RXDLV45-6518(U24)
2.4 GHz

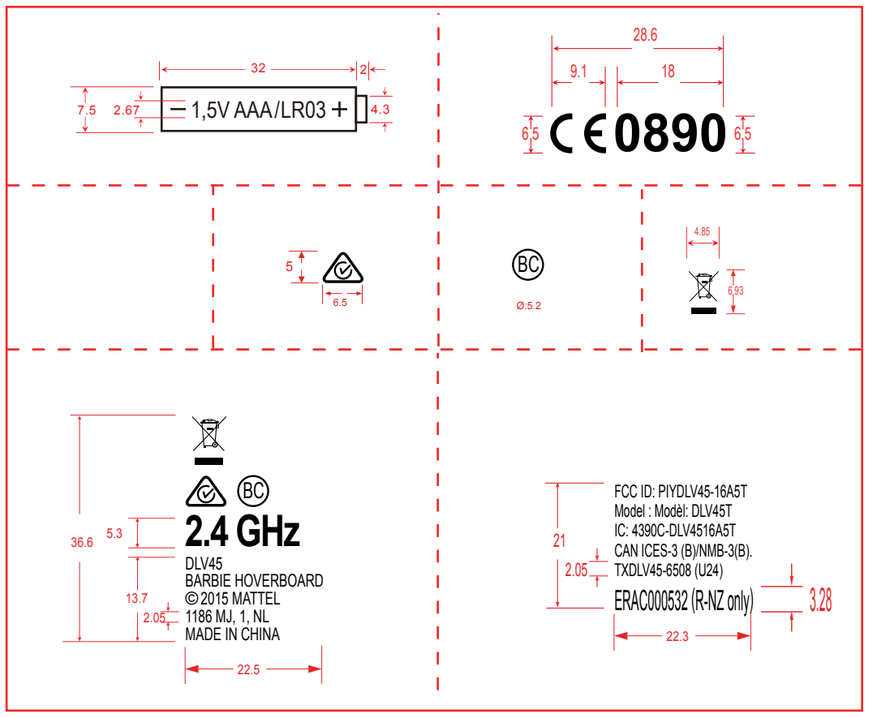
32
2
7.5
2.67
– 1,5V AAA/LR03 +
4.3
28.6
9.1
18
6.5
CE0890
6.5
5
6.5
Ø5.2
4.85
6.93
36.6
5.3
2.4 GHz
DLV45
BARBIE HOVERBOARD
©2015 MATTEL
1186 MJ, 1, NL
MADE IN CHINA
13.7
2.05
22.5
FCC ID: PIYDLV45-16A5T
Model : Modèl: DLV45T
IC: 4390C-DLV4516A5T
CAN ICES-3 (B)/NMB-3(B).
TXDLV45-6508 (U24)
21
2.05
ERAC000532 (R-NZ only)
3.28
22.3

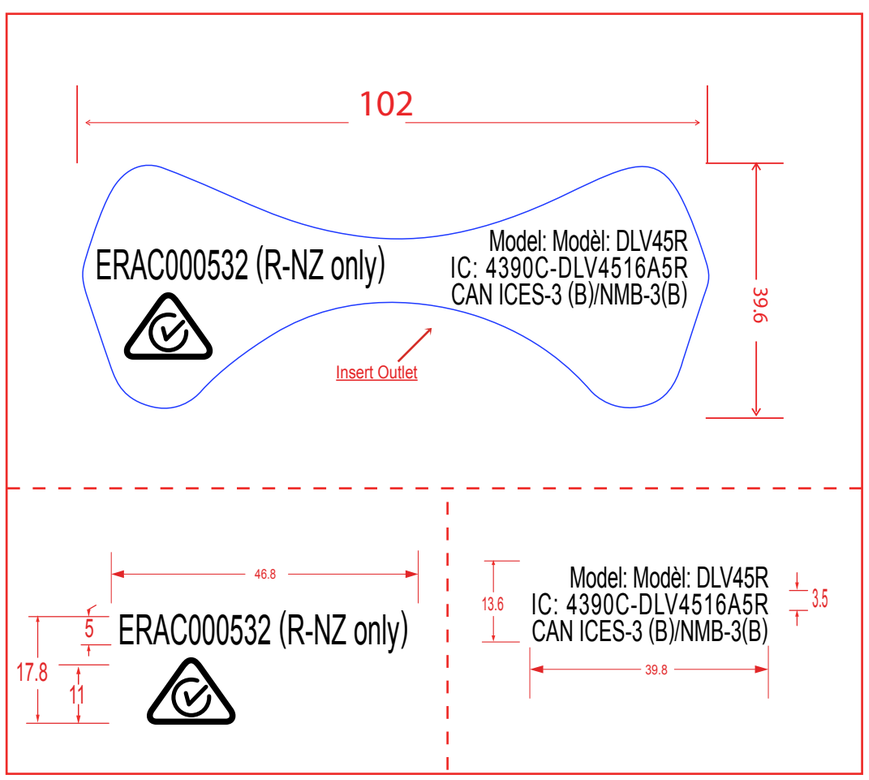
102
ERAC000532 (R-NZ only)
Model: Modèl: DLV45R
IC: 4390C-DLV4516A5R
CAN ICES-3 (B)/NMB-3(B)
39.6
Insert Outlet
46.8
5
17.8
11
ERAC000532 (R-NZ only)
13.6
Model: Modèl: DLV45R
IC: 4390C-DLV4516A5R
CAN ICES-3 (B)/NMB-3(B)
3.5
39.8

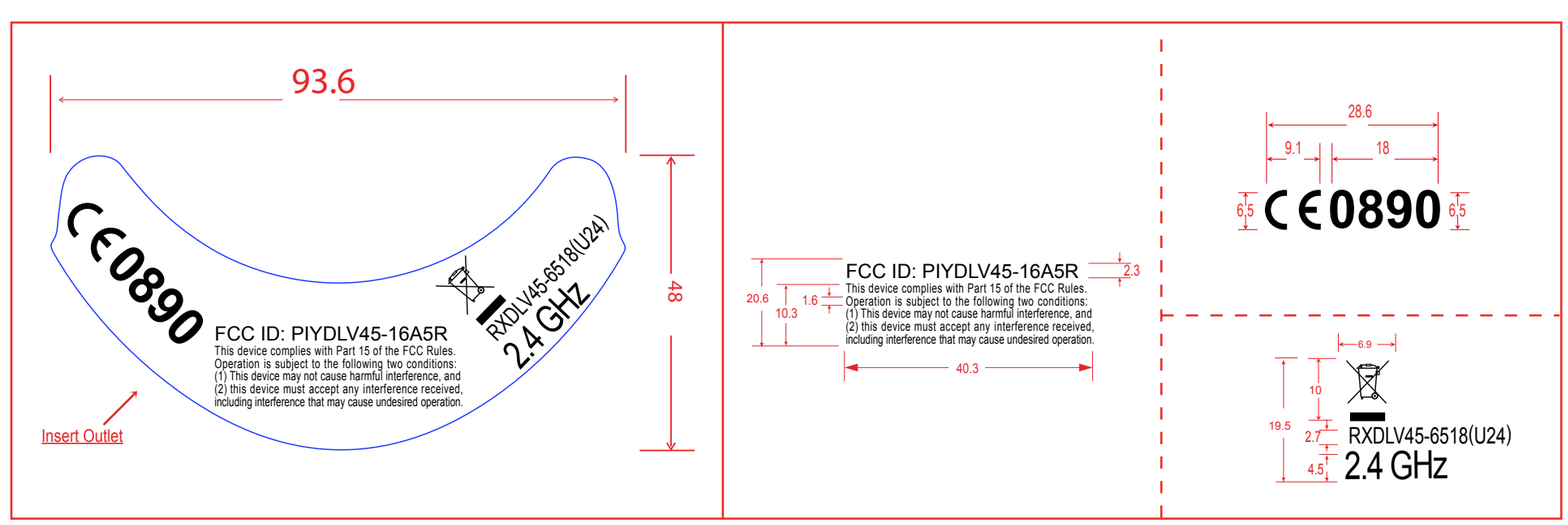
93.6
CE0890
FCC ID: PIYDLV45-16A5R
This device complies with Part 15 of the FCC Rules.
Operation is subject to the following two conditions:
(1) This device may not cause harmful interference, and
(2) this device must accept any interference received,
including interference that may cause undesired operation.
RXDLV45-6518(U24)
2.4 GHz
48
Insert Outlet
FCC ID: PIYDLV45-16A5R
This device complies with Part 15 of the FCC Rules.
Operation is subject to the following two conditions:
(1) This device may not cause harmful interference, and
(2) this device must accept any interference received,
including interference that may cause undesired operation.
2.3
20.6
1.6
10.3
40.3
28.6
9.1
18
6.5
CE0890
6.5
6.9
10
19.5
2.7
4.5
RXDLV45-6518(U24)
2.4 GHz