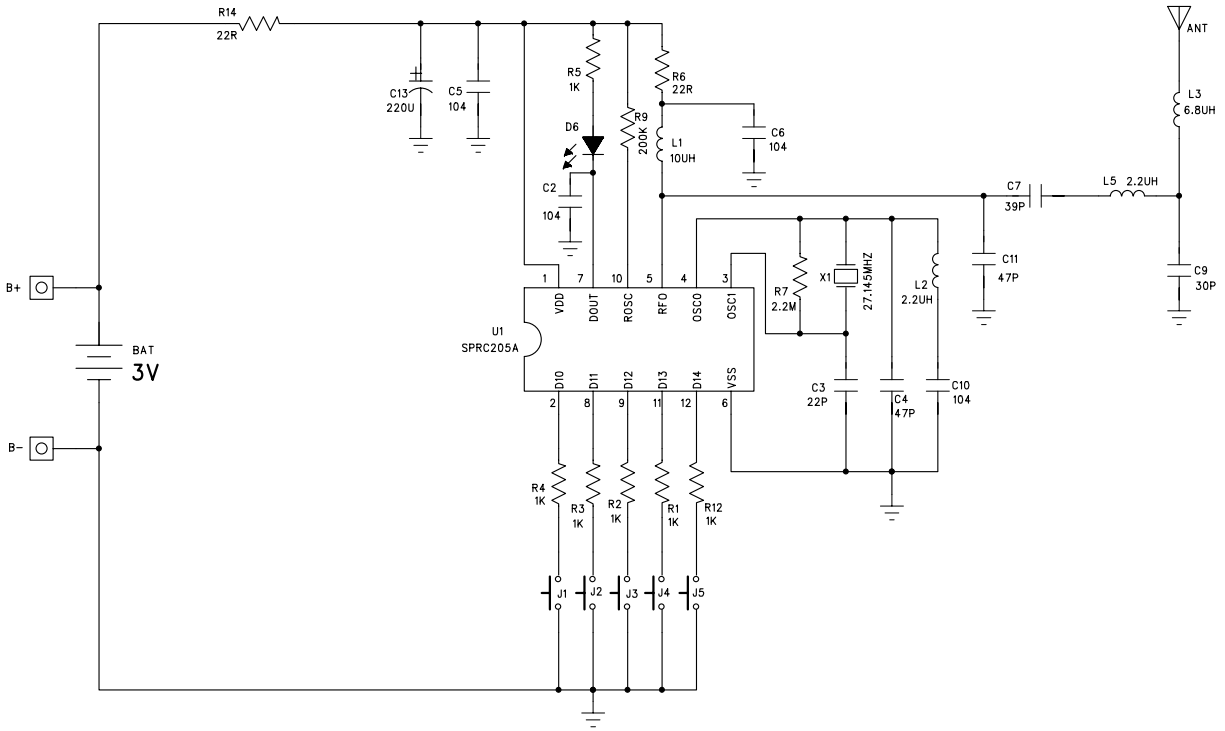

LUNG CHEONG	TITLE:	B5116 TX ROLLCAGE	DESIGN BY:	DRAWING BY:	APPROVED BY:	SHEET:
	FUNCTION:	TRANSMITTER	RCXIE	RCXIE		1 of 1
	DWG NO:	DZ01-0B5115-01	04-21-2004	04-21-2004		