BLOCK-DIAGRAM

B2219 TRANSMITTER 49.860MHz
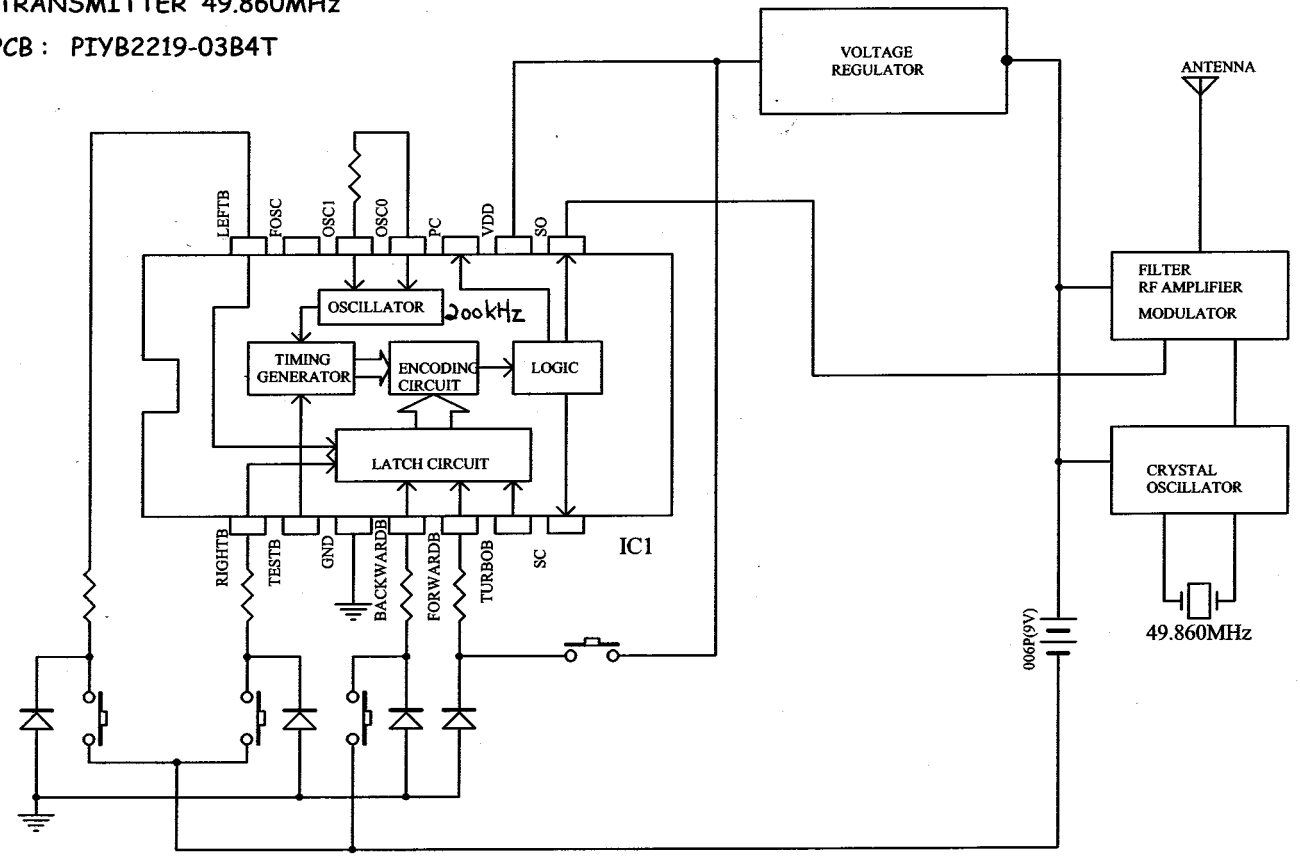
MAIN PCB : PIYB2219-03B4T