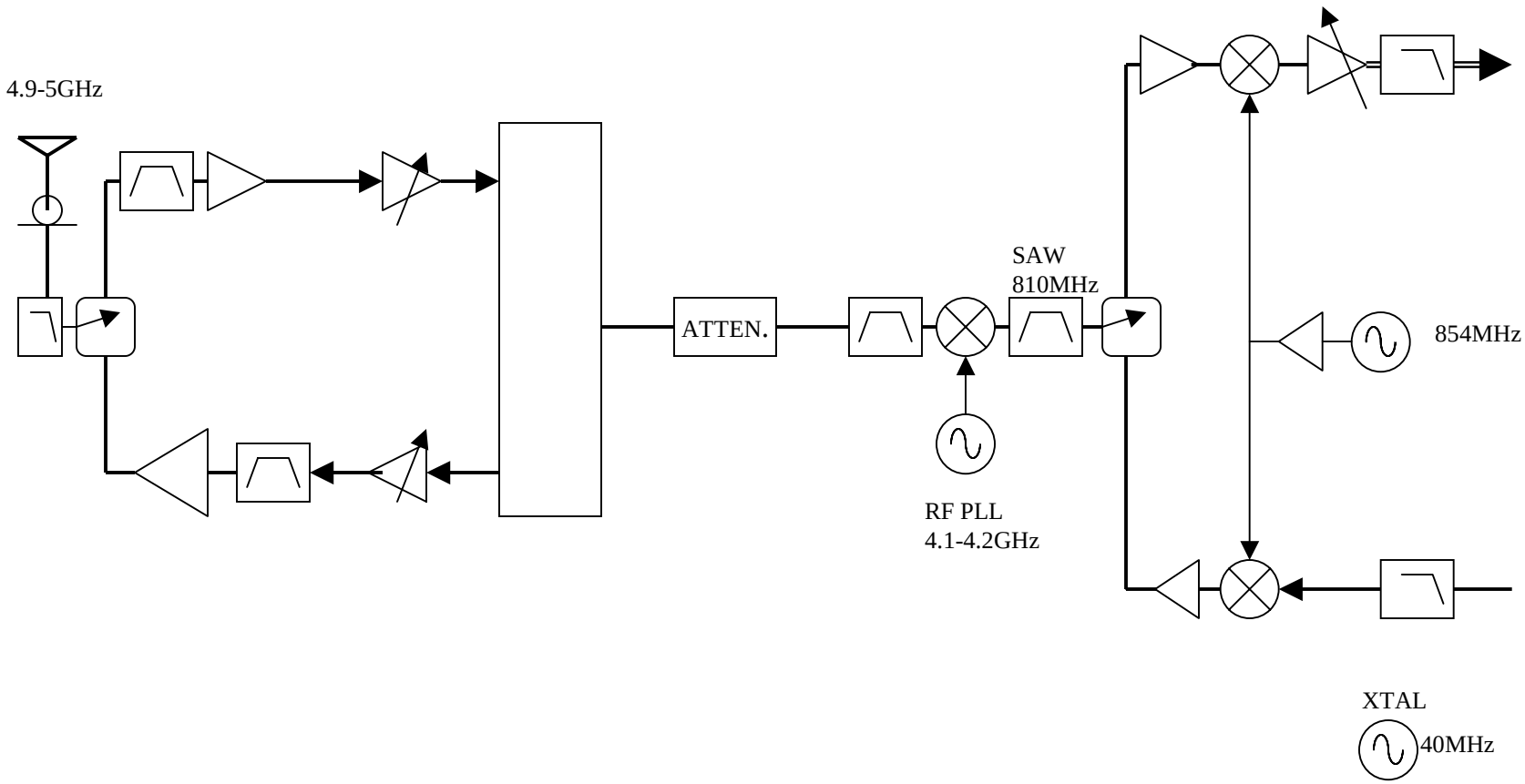ProST/EasyST 4.9 Block diagram