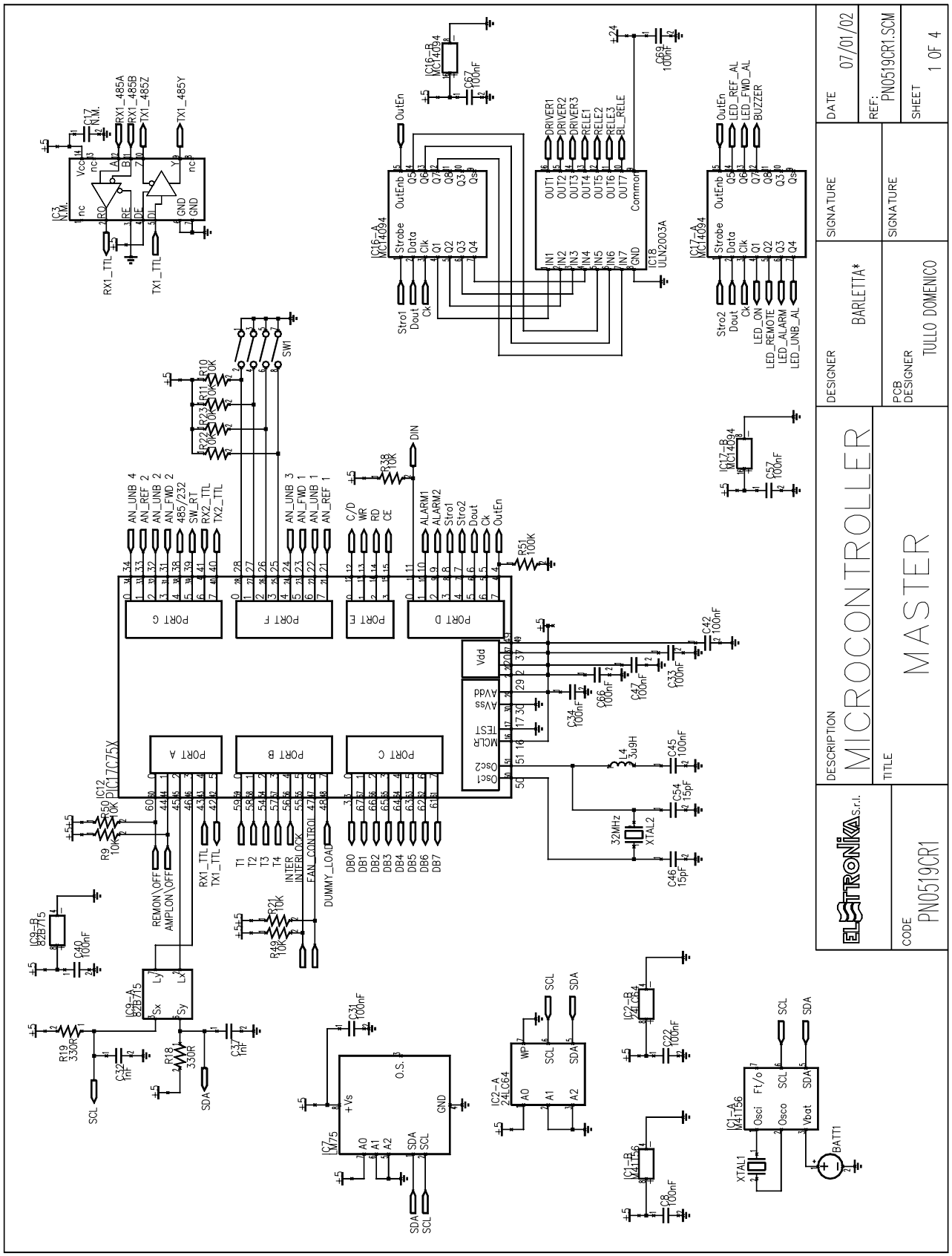
DESCRIPTION
MICROCONTROLLER
TITLE
MASTER
CODE
PN0519CR1
ELESTRONIKA s.r.l.
DATE
07/01/02
REF:
PN0519CR1.SCM
SHEET
1 OF 4
SIGNATURE
SIGNATURE
DESIGNER
BARLETTA*
PCB DESIGNER
TULLO DOMENICO
IC12 PIC17C75X
PORT A
PORT B
PORT C
PORT D
PORT E
PORT F
PORT G
IC16-A MC14094
IC16-B MC14094
IC17-A MC14094
IC17-B MC14094
IC18 ULN2003A
IC3 N.M.
IC9-A 82B715
IC9-B 82B715
IC7 W75
IC2-A 24LC64
IC2-B 24LC64
IC1-A PCF8583
IC1-B PCF8583
XTAL1
BATT1
XTAL2
32MHz
L4 3u9H
SW1
DIN
RX1_485A
RX1_485B
RX1_485Z
TX1_485Y
RX1_TTL
TX1_TTL
OutEn
Stro1
Dout1
Ck
Stro2
Dout2
LED_ON
LED_REMOTE
LED_ALARM
LED_UNB_AL
LED_REF_AL
LED_FWD_AL
BUZZER
DRIVER1
DRIVER2
DRIVER3
RELE1
RELE2
RELE3
BL_RELE
AN_UNB 4
AN_REF 2
AN_UNB 2
AN_FWD 2
485/232
SW_RT
RX2_TTL
TX2_TTL
AN_UNB 3
AN_FWD 1
AN_UNB 1
AN_REF 1
C/D
WR
RD
CE
ALARM1
ALARM2
REMON\OFF
AMPLON\OFF
T1
T2
T3
T4
INTER
INTERLOCK
FAN_CONTROL
DUMMY_LOAD
DB0
DB1
DB2
DB3
DB4
DB5
DB6
DB7
SCL
SDA

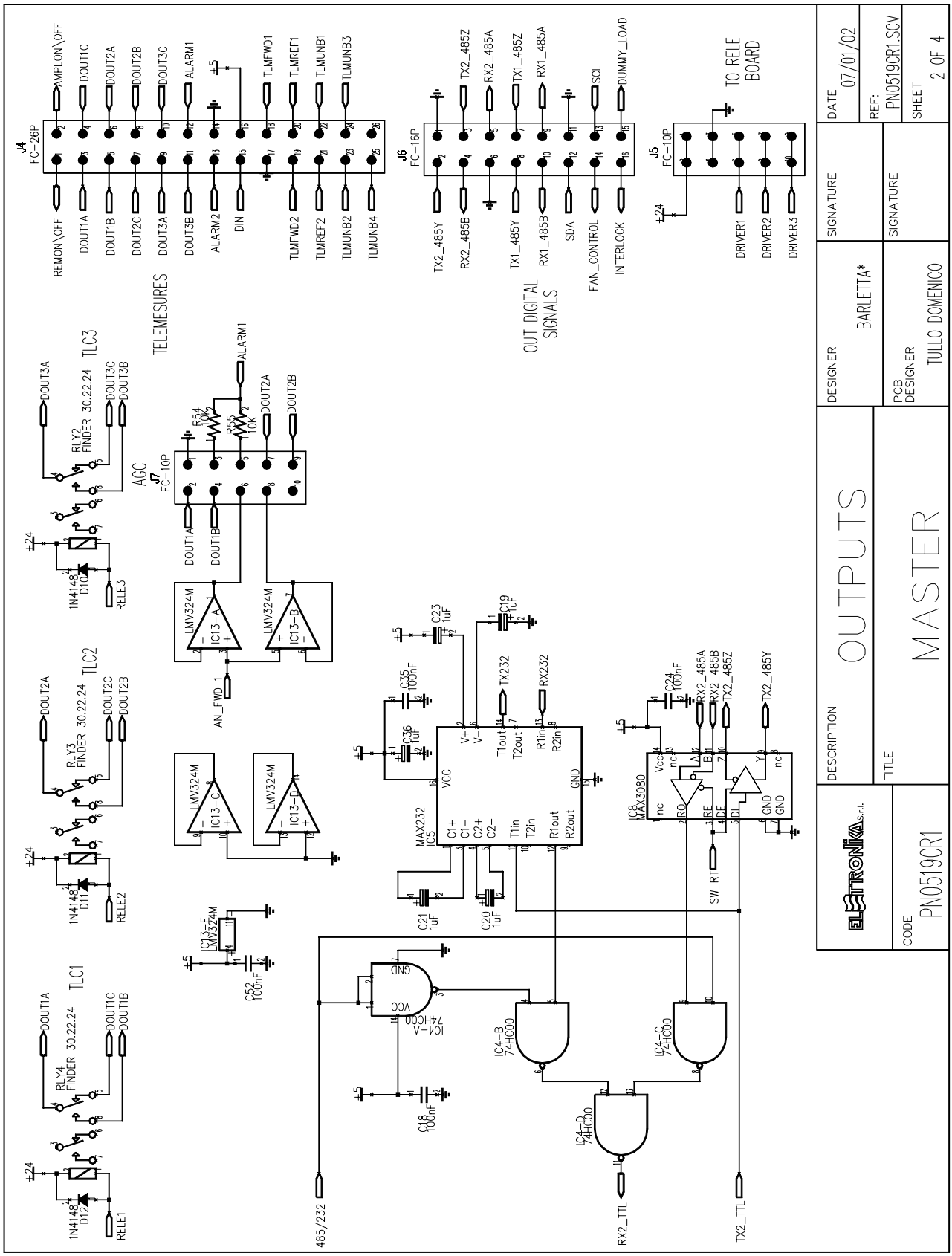
J4
FC-26P
AMPLON\OFF
DOUT1C
DOUT2A
DOUT2B
DOUT3C
ALARM1
TLMFWD1
TLMREF1
TLMUNB1
TLMUNB3
REMON\OFF
DOUT1A
DOUT1B
DOUT2C
DOUT3A
DOUT3B
ALARM2
DIN
TLMFWD2
TLMREF2
TLMUNB2
TLMUNB4
TELEMESURES
J6
FC-16P
TX2_485Z
RX2_485A
TX1_485Z
RX1_485A
SCL
DUMMY_LOAD
TX2_485Y
RX2_485B
TX1_485Y
RX1_485B
SDA
FAN_CONTROL
INTERLOCK
OUT DIGITAL SIGNALS
J5
FC-10P
TO RELE BOARD
DRIVER1
DRIVER2
DRIVER3
TLC3
RLY2 FINDER 30.22.24
DOUT3A
DOUT3C
DOUT3B
D10 1N4148
RELE3
TLC2
RLY3 FINDER 30.22.24
DOUT2A
DOUT2C
DOUT2B
D11 1N4148
RELE2
TLC1
RLY4 FINDER 30.22.24
DOUT1A
DOUT1C
DOUT1B
D12 1N4148
RELE1
AGC
J7
FC-10P
R54 10K
R55 10K
ALARM1
DOUT2A
DOUT2B
DOUT1A
DOUT1B
IC13-A LMV324M
IC13-B LMV324M
IC13-C LMV324M
IC13-D LMV324M
IC13-E LMV324M
AN_FWD_1
C52 100nF
C23 1uF
C19 1uF
C35 100nF
C36 1uF
MAX232 IC5
VCC
GND
V+
V-
C1+
C1-
C2+
C2-
T1in
T2in
R1out
R2out
T1out
T2out
R1in
R2in
TX232
RX232
C21 1uF
C20 1uF
C24 100nF
IC8 MAX3080
Vcc
nc
RO
RE
DE
DI
A
B
Y
GND
RX2_485A
RX2_485B
TX2_485Z
TX2_485Y
SW_RT
IC4-A 74HC00
IC4-B 74HC00
IC4-C 74HC00
IC4-D 74HC00
C18 100nF
485/232
RX2_TTL
TX2_TTL
DATE 07/01/02
REF: PN0519CR1.SCM
SHEET 2 OF 4
SIGNATURE
SIGNATURE
DESIGNER BARLETTA*
PCB DESIGNER TULLO DOMENICO
DESCRIPTION OUTPUTS
TITLE MASTER
ELETTRONIKA s.r.l.
CODE PN0519CR1

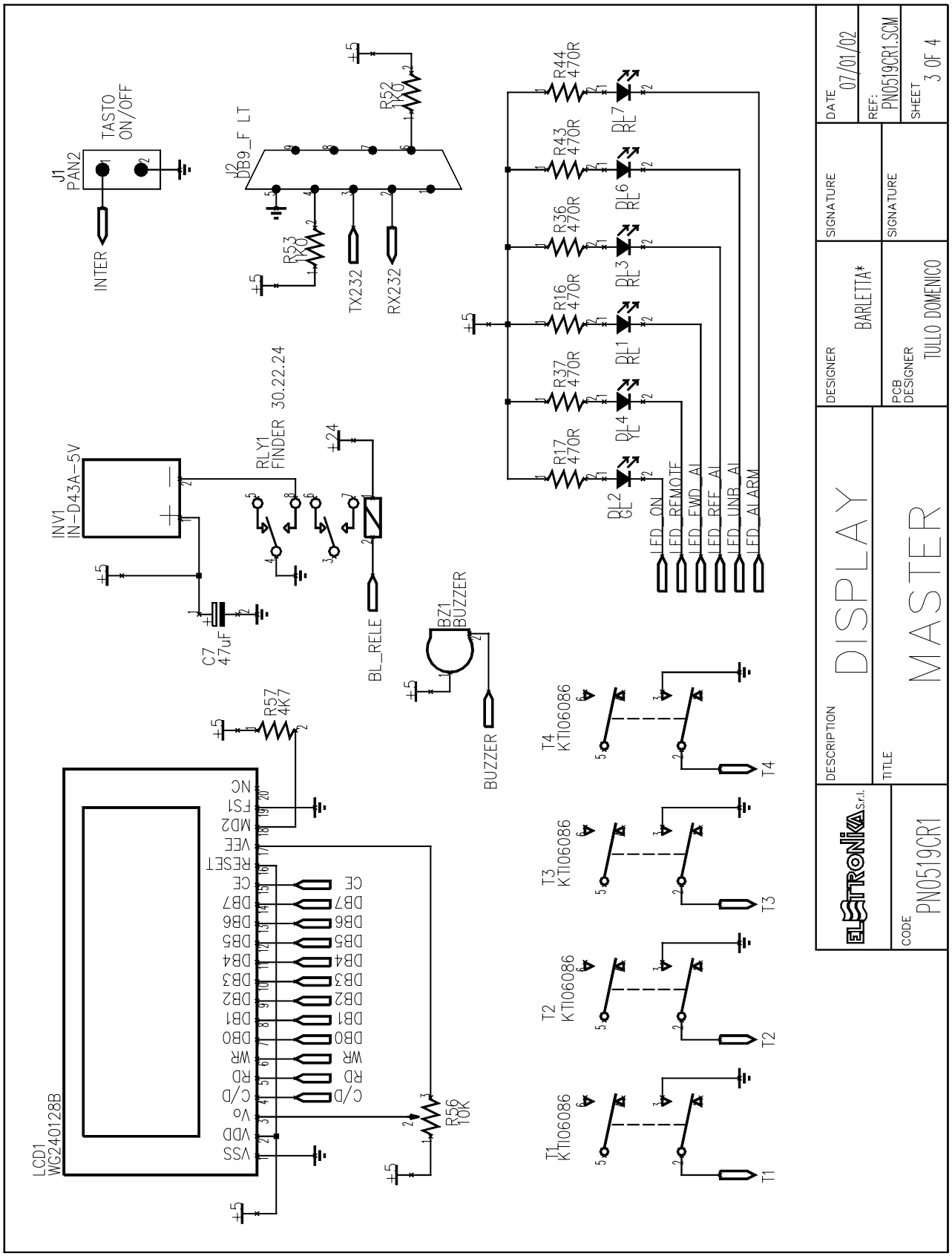
J1
PAN2
TASTO
ON/OFF
INTER
J2
DB9_F LT
R52
10
R53
10
TX232
RX232
+5
R44
470R
R43
470R
R36
470R
R16
470R
R37
470R
R17
470R
RL7
RL6
RL3
RL1
RL4
RL2
LED_ON
LED_REMOTE
LED_FWD_AI
LED_REF_AI
LED_UNR_AI
LED_AI ARM
INV1
IN-D43A-5V
RLY1
FINDER 30.22.24
+24
C7
47uF
BL_RELE
BZ1
BUZZER
BUZZER
R57
4K7
LCD1
WG240128B
VSS
VDD
Vo
C/D
RD
WR
DB0
DB1
DB2
DB3
DB4
DB5
DB6
DB7
CE
RESET
VEE
MD2
FS1
NC
R56
10K
T1
KTI06086
T2
KTI06086
T3
KTI06086
T4
KTI06086
DATE
07/01/02
REF:
PN0519CR1.SCM
SHEET
3 OF 4
SIGNATURE
SIGNATURE
DESIGNER
BARLETTA*
PCB DESIGNER
TULLO DOMENICO
DESCRIPTION
DISPLAY
TITLE
MASTER
ELETTRONIKA S.r.l.
CODE
PN0519CR1

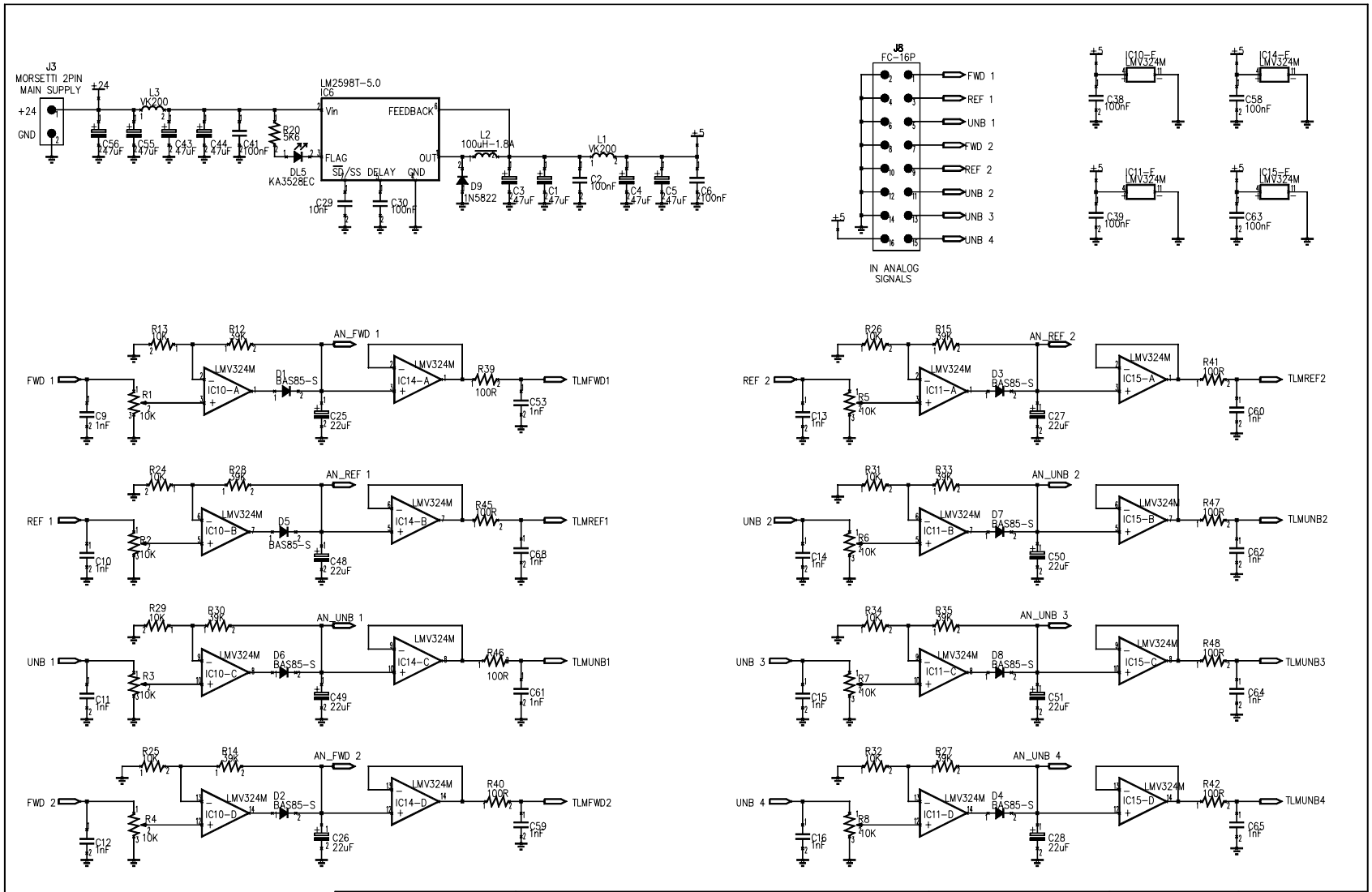

ELETTRONIKA S.r.l.	DESCRIPTION: INPUT SIGNAL	DESIGNER: BARLETTA*	SIGNATURE	DATE: 07/01/02
	TITLE: MASTER	PCB DESIGNER: TULLO DOMENICO	SIGNATURE	REF: PN0519CR1.SCM
CODE: PN0519CR1				SHEET: 4 OF 4

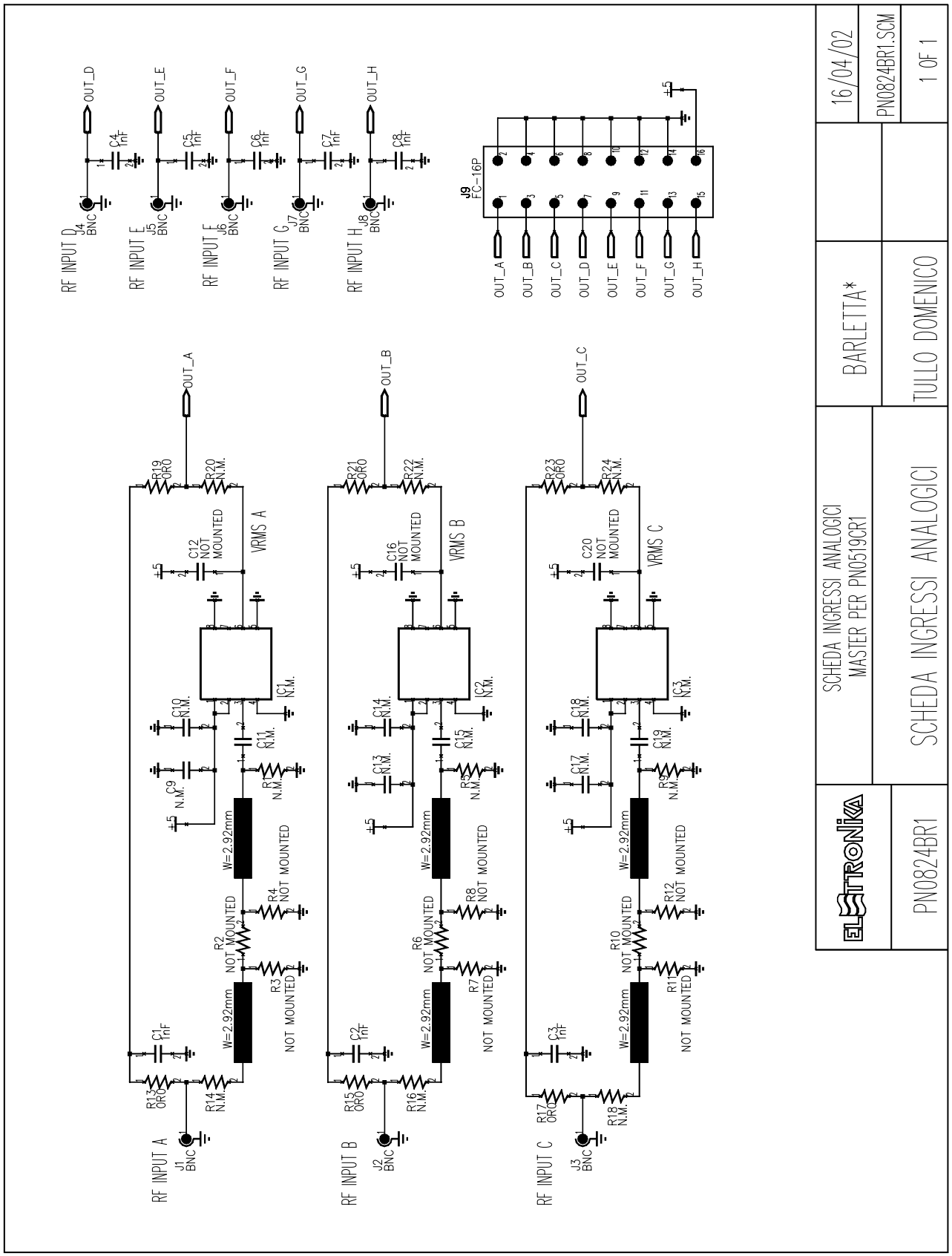
RF INPUT A
J1 BNC
RF INPUT B
J2 BNC
RF INPUT C
J3 BNC
RF INPUT D
J4 BNC
RF INPUT E
J5 BNC
RF INPUT F
J6 BNC
RF INPUT G
J7 BNC
RF INPUT H
J8 BNC
J9 FC-16P
OUT_A
OUT_B
OUT_C
OUT_D
OUT_E
OUT_F
OUT_G
OUT_H
VRMS A
VRMS B
VRMS C
IC1 N.M.
IC2 N.M.
IC3 N.M.
W=2.92mm
NOT MOUNTED
16/04/02
PN0824BR1.SCM
1 OF 1
BARLETTA*
TULLO DOMENICO
SCHEDA INGRESSI ANALOGICI
MASTER PER PN0519CR1
SCHEDA INGRESSI ANALOGICI
ELETTRONIKA
PN0824BR1

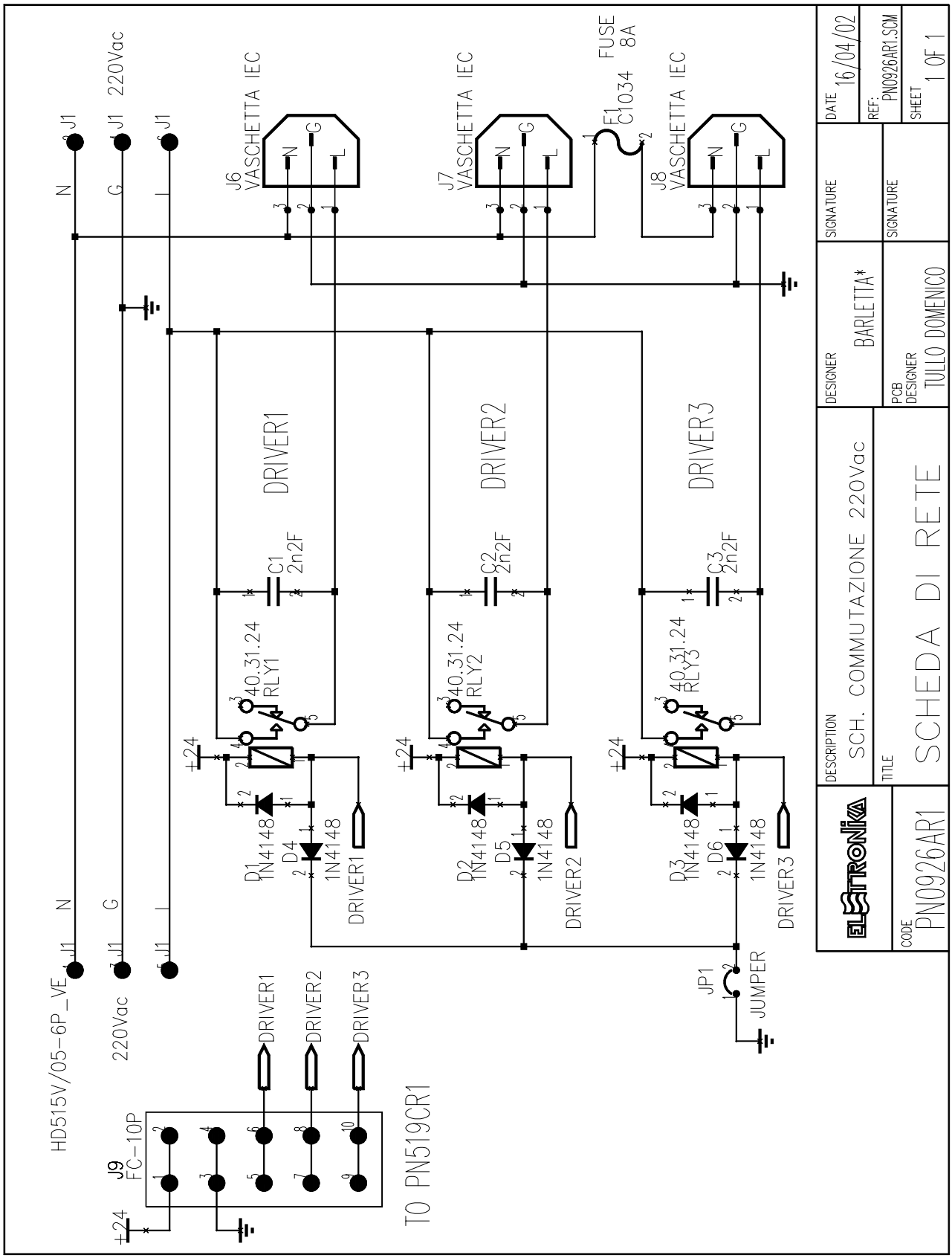
J1
N
G
L
220Vac
J6
VASCHETTA IEC
J7
VASCHETTA IEC
J8
VASCHETTA IEC
FUSE
8A
F1
C1034
DRIVER1
DRIVER2
DRIVER3
C1
2n2F
C2
2n2F
C3
2n2F
40.31.24
RLY1
RLY2
RLY3
+24
D1
1N4148
D2
1N4148
D3
1N4148
D4
1N4148
D5
1N4148
D6
1N4148
JP1
JUMPER
HD515V/05-6P_VE
J9
FC-10P
TO PN519CR1
DATE 16/04/02
REF: PN0926AR1.SCM
SHEET 1 OF 1
SIGNATURE
DESIGNER BARLETTA*
PCB DESIGNER TULLO DOMENICO
DESCRIPTION SCH. COMMUTAZIONE 220Vac
TITLE SCHEDA DI RETE
ELETTRONIKA
CODE PN0926AR1

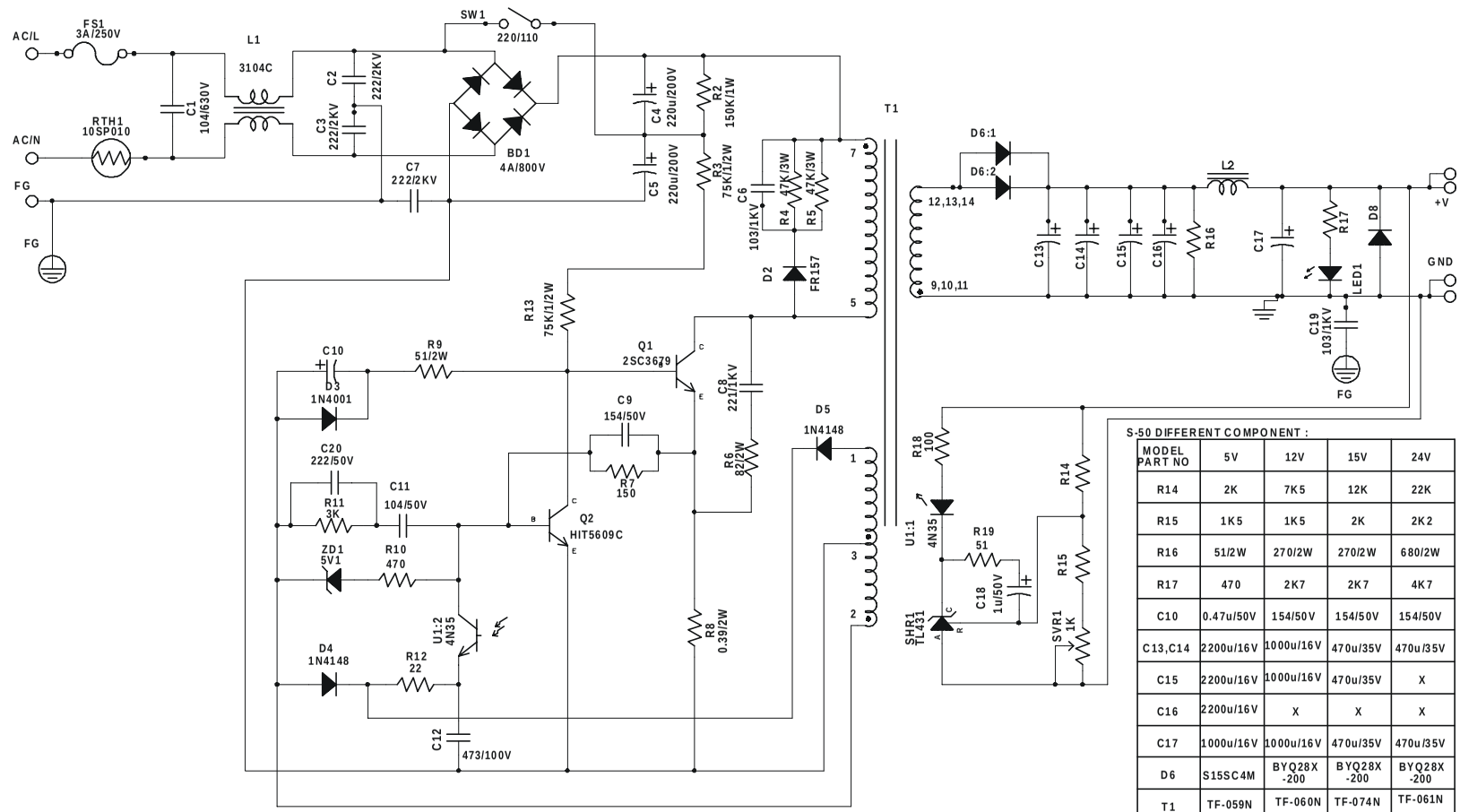

S-50 DIFFERENT COMPONENT :

MODEL PART NO	5V	12V	15V	24V
R14	2K	7K5	12K	22K
R15	1K5	1K5	2K	2K2
R16	51/2W	270/2W	270/2W	680/2W
R17	470	2K7	2K7	4K7
C10	0.47u/50V	154/50V	154/50V	154/50V
C13,C14	2200u/16V	1000u/16V	470u/35V	470u/35V
C15	2200u/16V	1000u/16V	470u/35V	X
C16	2200u/16V	X	X	X
C17	1000u/16V	1000u/16V	470u/35V	470u/35V
D6	S15SC4M	BYQ28X -200	BYQ28X -200	BYQ28X -200
T1	TF-059N	TF-060N	TF-074N	TF-061N
L2	RB-011	RB-009	RB-003	RB-003
D8	X	FR102	FR102	FR102

ELETRONIKA S.r.l.	DESCRIPTION: ELECTRICAL DIAGRAM	DESIGNER	SIGNATURE	DATE 04/09/02
	TITLE: S-50-R2 SWITCHING POWER SUPPLY	PCB DESIGNER	SIGNATURE	REF:
CODE		QUALITY CONTROL	SIGNATURE	SHEET 1/2

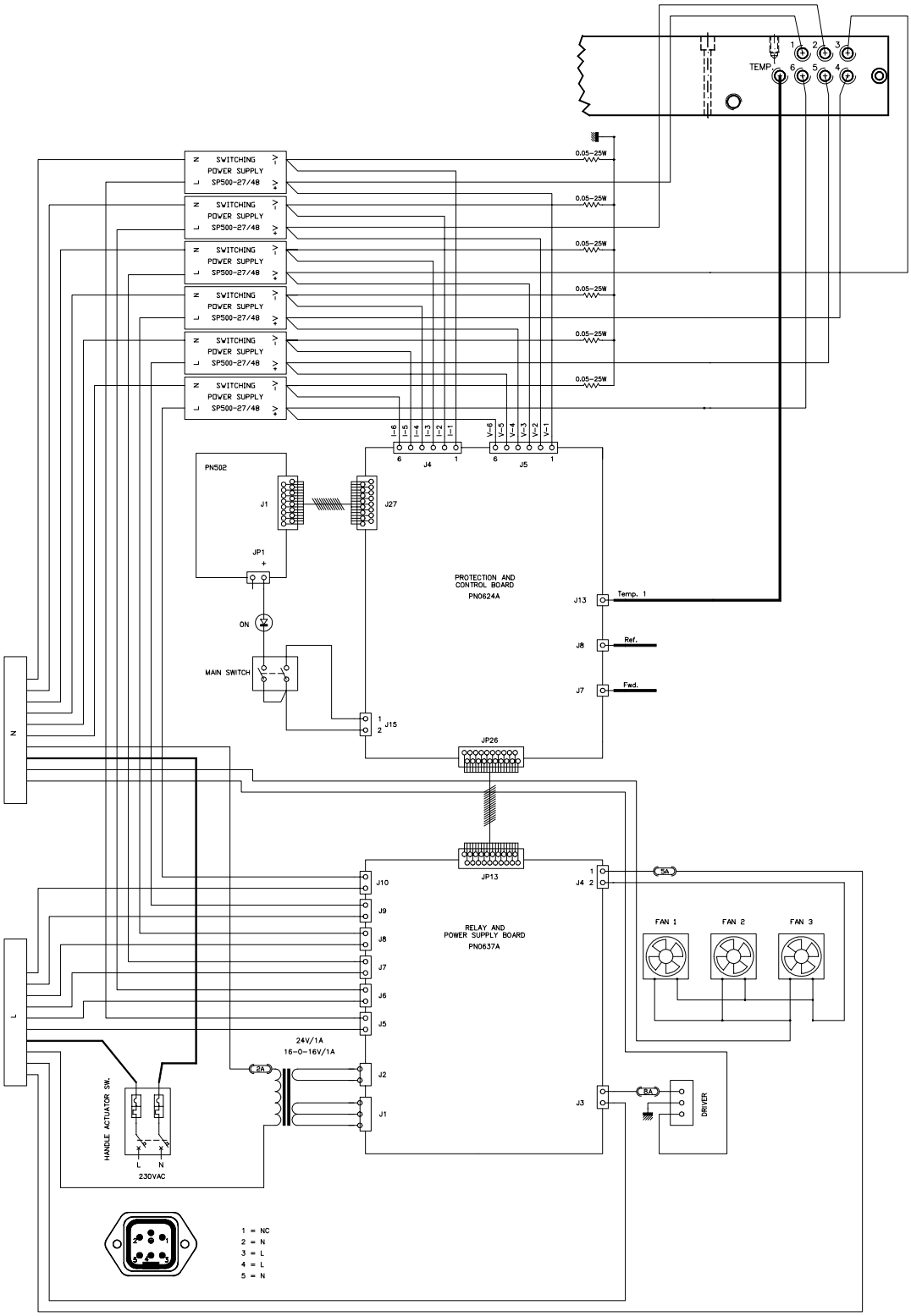

ELETTRONIKA srl	DESCRIPTION WIRING DIAGRAM	DESIGNER MASTRORILLI	Sign.	DATE 04/12/01
	TITLE	PCB DESIGNER LAPIETRA	Sign.	REF ------
CODE APT084ASF	1000W LDMOS	QUALITY CONTROL	Sign.	SHEET 1 OF 1

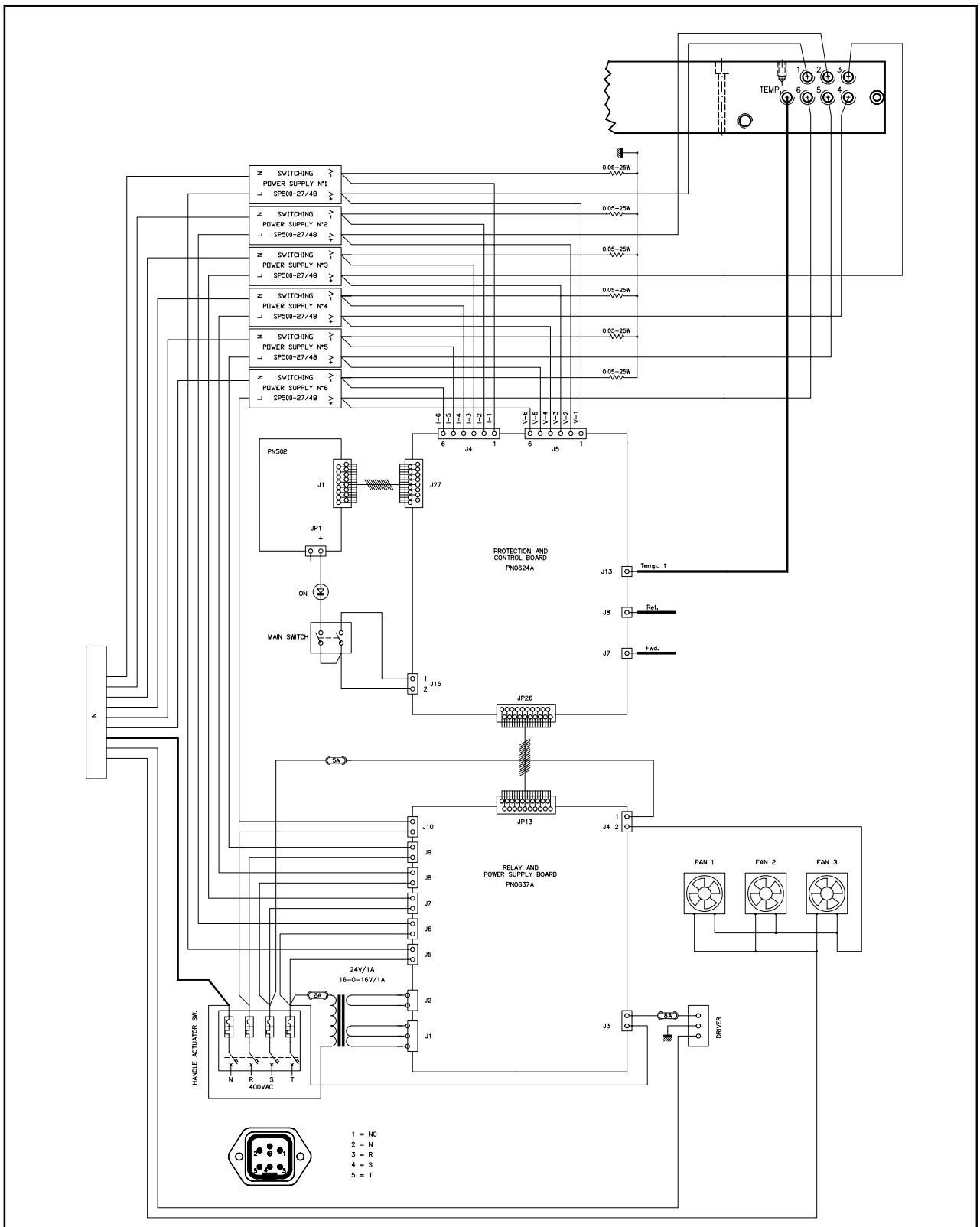

ELETTRONIKA srl	DESCRIPTION WIRING DIAGRAM	DESIGNER MASTRORILLI	Sign.	DATE 04/12/01
	TITLE 1000W LDMOS – 3P+N	PCB DESIGNER LAPIETRA	Sign.	REF -----
CODE APT084AST		QUALITY CONTROL	Sign.	SHEET ----

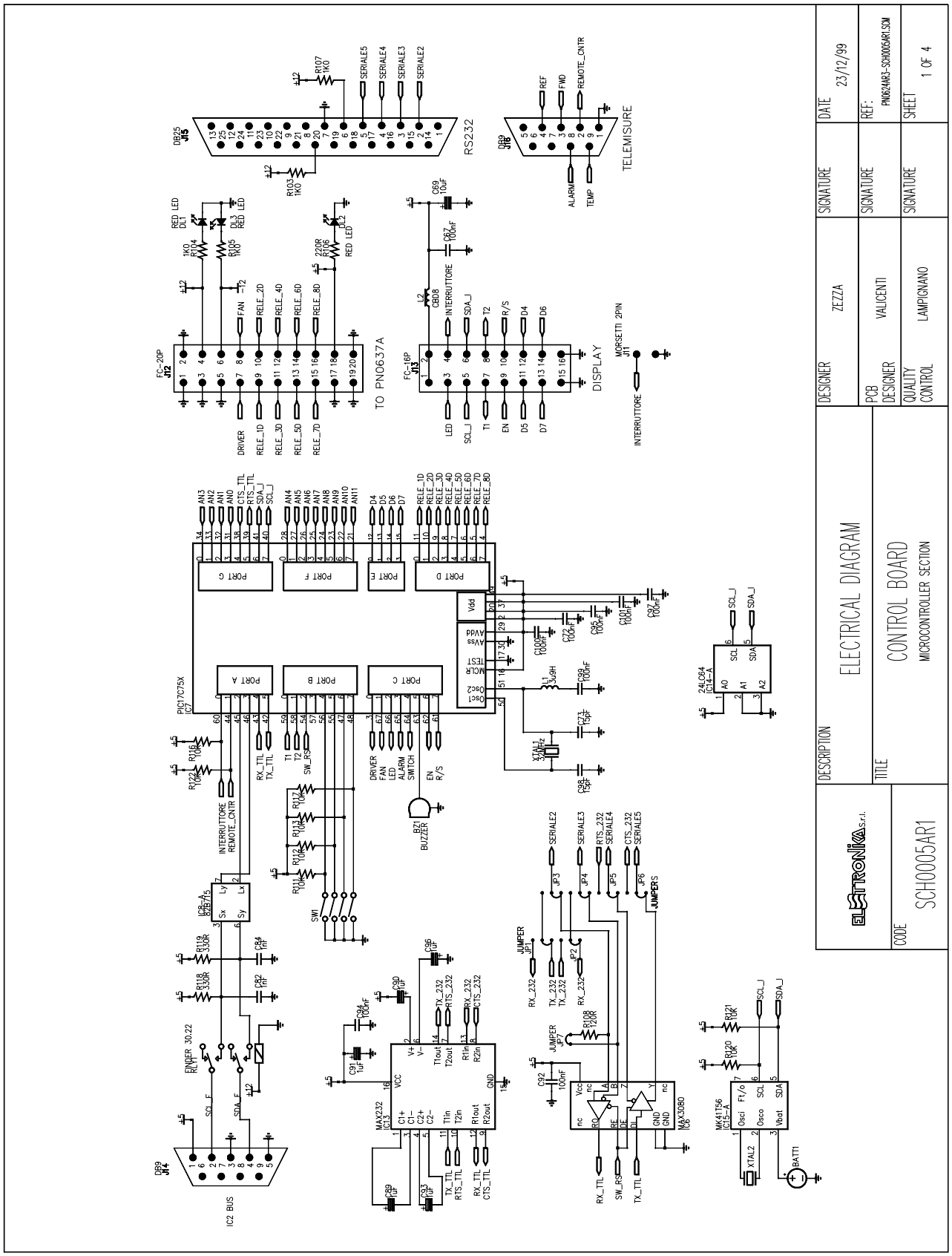
DESCRIPTION
ELECTRICAL DIAGRAM
TITLE
CONTROL BOARD
MICROCONTROLLER SECTION
CODE
SCH0005AR1
ELETTRONIKA S.r.l.
DESIGNER
ZEZZA
PCB DESIGNER
VALICENTI
QUALITY CONTROL
LAMPIGNANO
SIGNATURE
DATE
23/12/99
REF:
PN0624AR3-SCH0005AR1.SCM
SHEET
1 OF 4
RS232
TELEMISURE
DISPLAY
TO PN0637A
PIC17C75X
MAX232
MAX3080
24LC64
WK41T56
IC2 BUS
JUMPERS
BUZZER
MORSETTI 2PIN
INTERRUTTORE
REMOTE_CNTR
RELE_1D
RELE_2D
RELE_3D
RELE_4D
RELE_5D
RELE_6D
RELE_7D
RELE_8D
SERIALE2
SERIALE3
SERIALE4
SERIALE5
RX_TTL
TX_TTL
RX_232
TX_232
RTS_232
CTS_232
SCL_F
SDA_F
SCL_I
SDA_I
BATT1
XTAL2

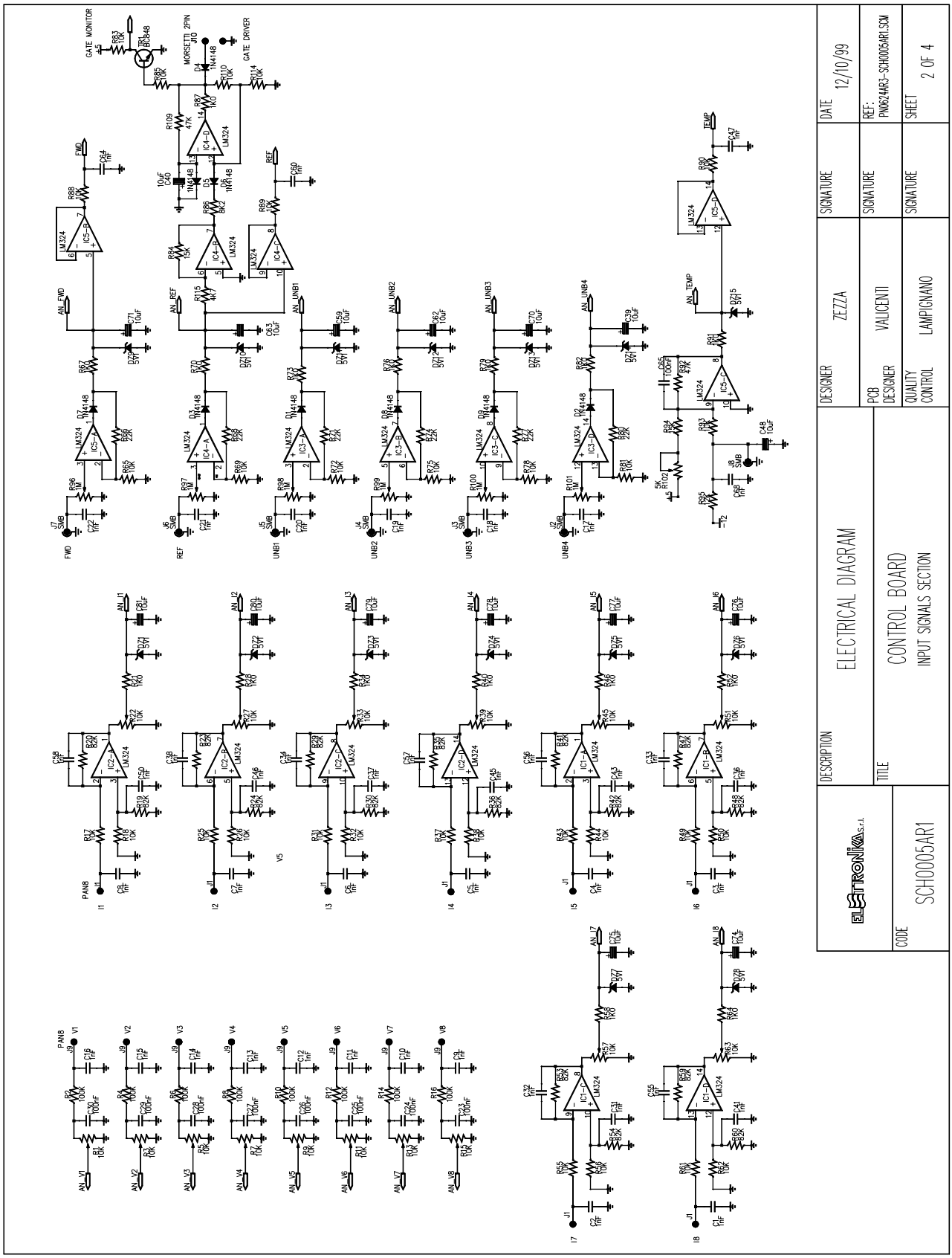
GATE MONITOR
MORSETTI 2PIN
GATE DRIVER
FWD
REF
UNB1
UNB2
UNB3
UNB4
TEMP
AN_FWD
AN_REF
AN_UNB1
AN_UNB2
AN_UNB3
AN_UNB4
AN_TEMP
LM324
PAN8
AN_I1
AN_I2
AN_I3
AN_I4
AN_I5
AN_I6
AN_I7
AN_I8
AN_V1
AN_V2
AN_V3
AN_V4
AN_V5
AN_V6
AN_V7
AN_V8
DESCRIPTION
ELECTRICAL DIAGRAM
TITLE
CONTROL BOARD
INPUT SIGNALS SECTION
CODE
SCH0005AR1
ELETRONIKA S.r.l.
DESIGNER
ZEZZA
PCB DESIGNER
VALICENTI
QUALITY CONTROL
LAMPIGNANO
SIGNATURE
DATE
12/10/99
REF:
PN0624AR3-SCH0005AR1.SCM
SHEET
2 OF 4

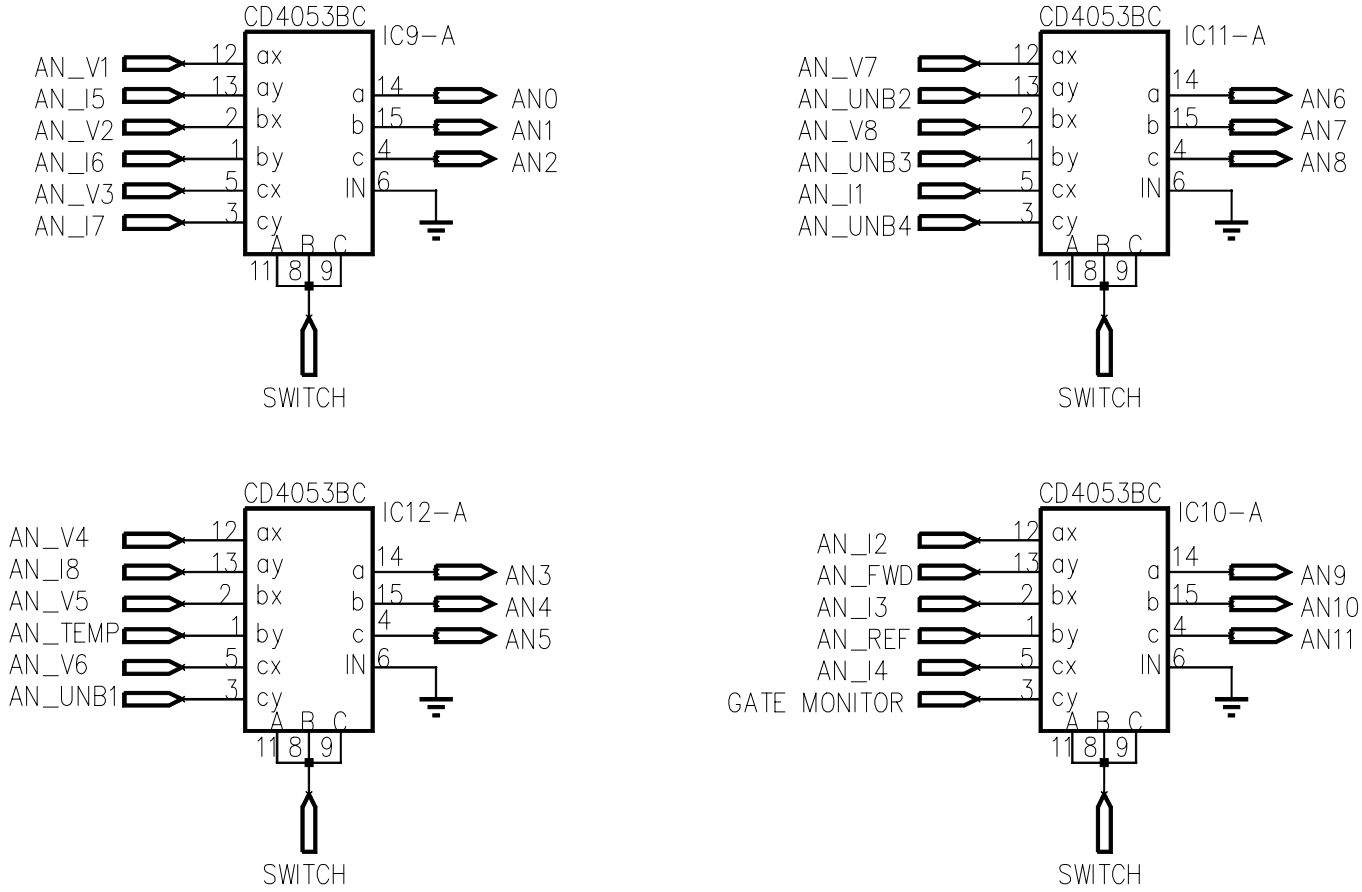

ELETTRONIKA s.r.l.	DESCRIPTION ELECTRICAL DIAGRAM	DESIGNER ZEZZA	SIGNATURE	DATE 12/10/99
CODE SCH0005AR1	TITLE CONTROL BOARD MULTIPLEXER SECTION	PCB DESIGNER VALICENTI	SIGNATURE	REF: PN0624AR3-SCH0005AR1.SCM
		QUALITY CONTROL LAMPIGNANO	SIGNATURE	SHEET 3 OF 4

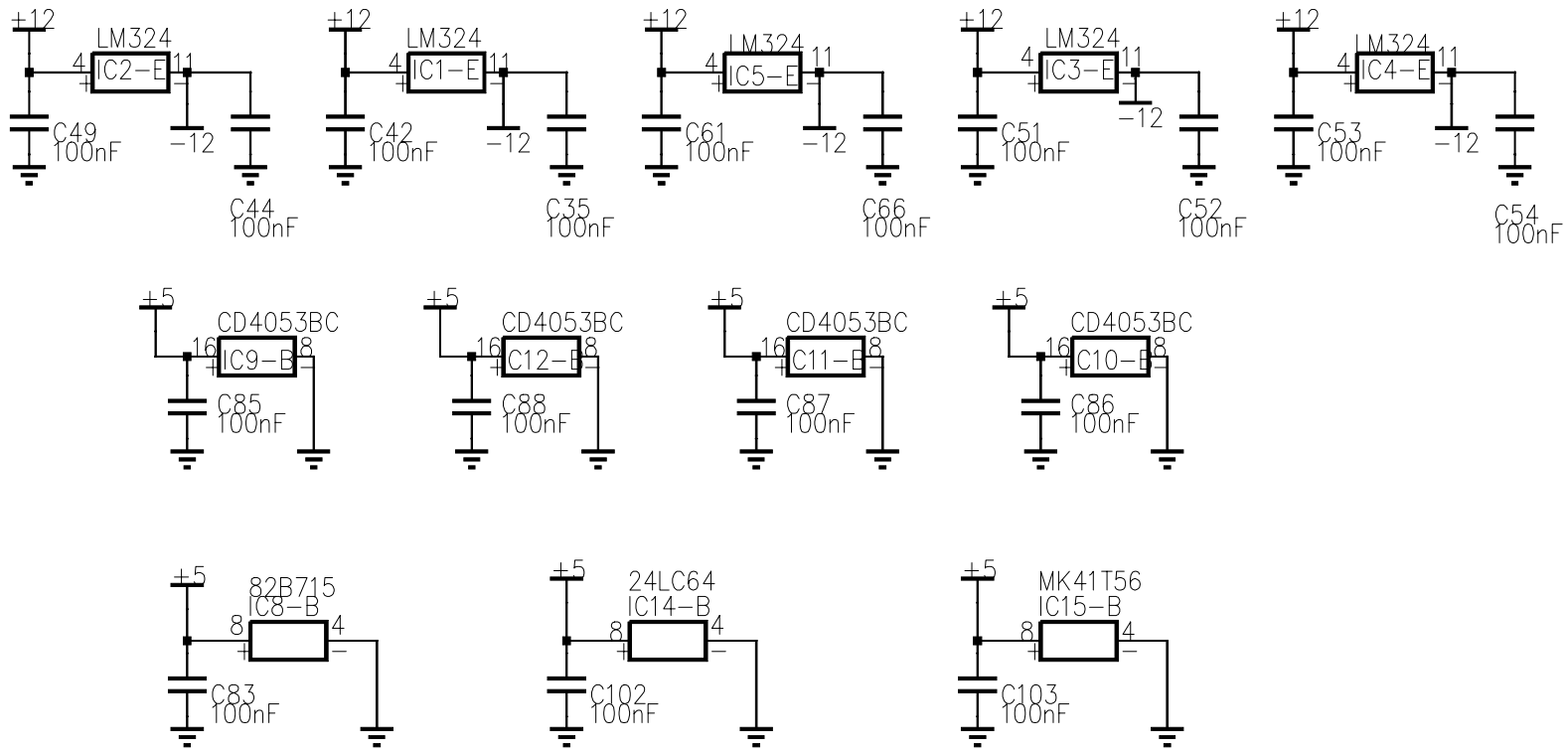

ELETTRONIKA s.r.l.	DESCRIPTION: ELECTRICAL DIAGRAM	DESIGNER: ZEZZA	SIGNATURE	DATE: 12/10/99
CODE: SCH0005AR1	TITLE: CONTROL BOARD POWER SUPPLY	PCB DESIGNER: VALICENTI	SIGNATURE	REF: PN0624AR3-SCH0005AR1.SCM
		QUALITY CONTROL: LAMPIGNANO	SIGNATURE	SHEET: 4 OF 4

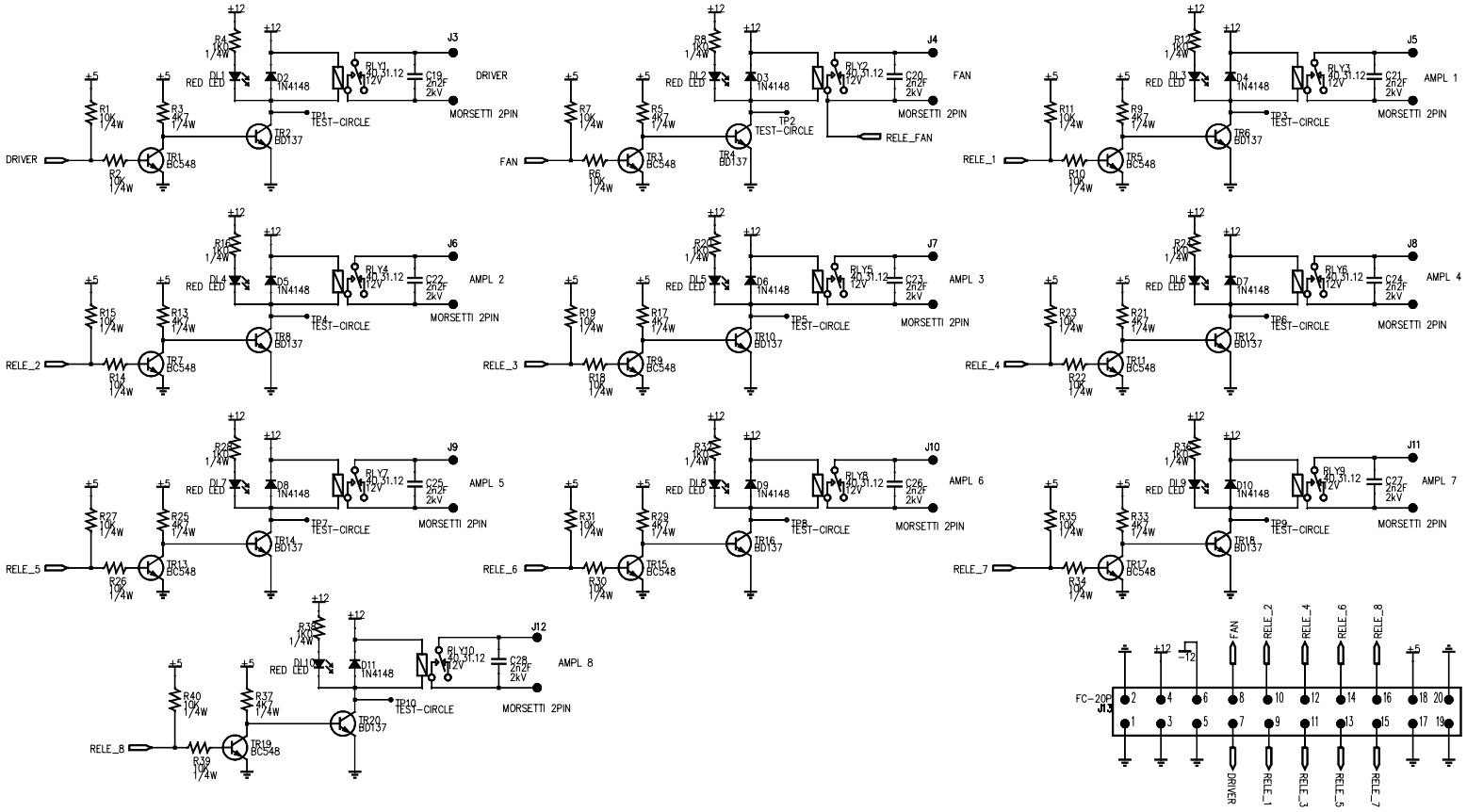

ELETTRONIKA S.r.l.	DESCRIPTION ELECTRICAL DIAGRAM	DESIGNER ZEZZA	SIGNATURE	DATE 06/08/99
	TITLE	PCB DESIGNER VALICENTI	SIGNATURE	REF: PN0637AR1_SCH0004AR0.SCM
CODE SCH0004AR0	RELAY UNIT	QUALITY CONTROL LAMPIGNANO	SIGNATURE	SHEET 1 OF 2

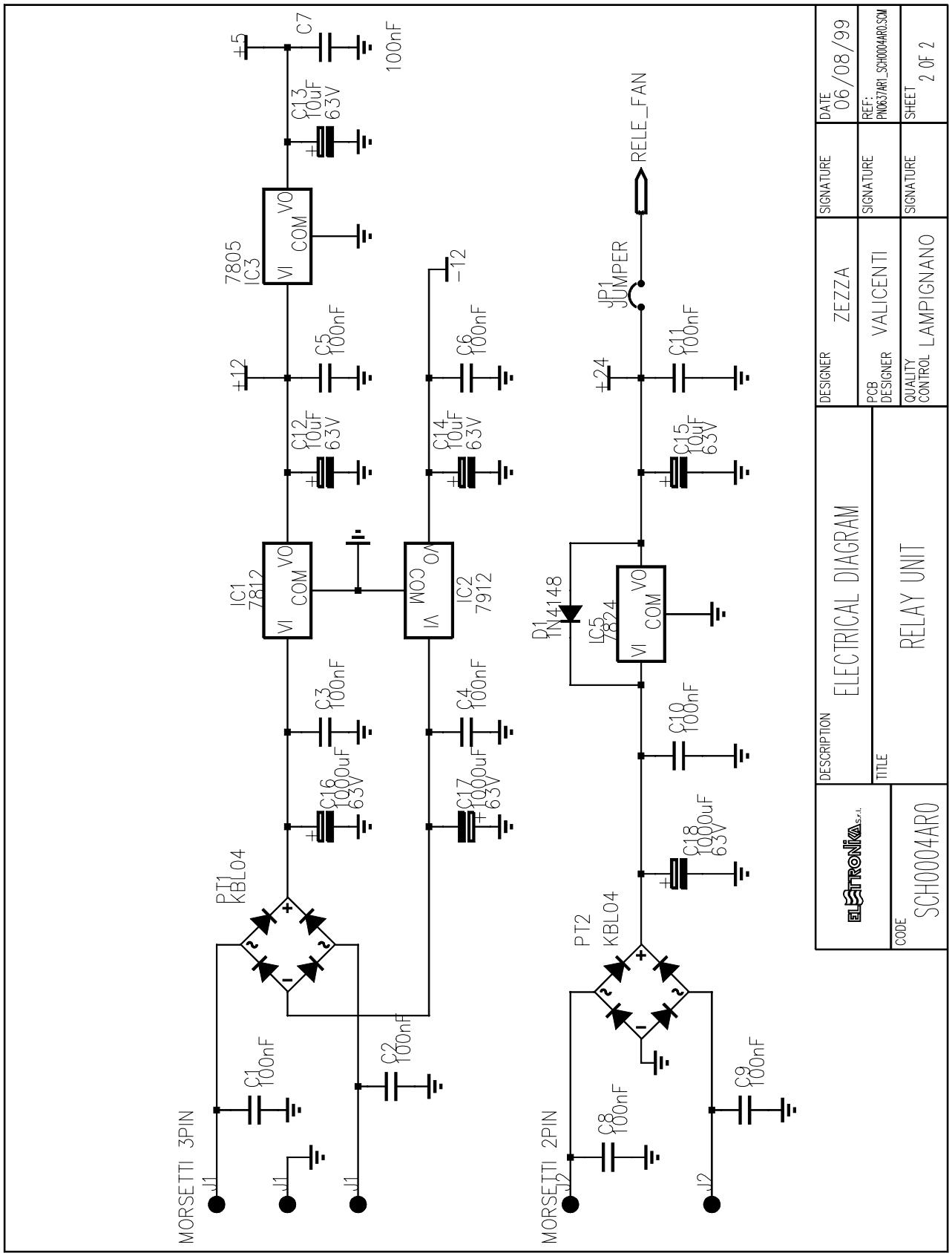
MORSETTI 3PIN
J1
C1 100nF
PT1 KBL04
C2 100nF
C16 1000uF 63V
C3 100nF
IC1 7812
VI COM VO
C12 10uF 63V
+12
C5 100nF
IC3 7805
VI COM VO
C13 10uF 63V
+5
C7 100nF
C17 1000uF 63V
C4 100nF
IC2 7912
VI COM VO
C14 10uF 63V
C6 100nF
-12
MORSETTI 2PIN
J2
C8 100nF
PT2 KBL04
C9 100nF
C18 1000uF 63V
C10 100nF
D1 1N4148
IC5 7824
VI COM VO
C15 10uF 63V
+24
C11 100nF
JP1 JUMPER
RELE_FAN
DESCRIPTION
ELECTRICAL DIAGRAM
TITLE
RELAY UNIT
CODE
SCH0004AR0
DESIGNER
ZEZZA
PCB DESIGNER
VALICENTI
QUALITY CONTROL
LAMPIGNANO
SIGNATURE
DATE
06/08/99
REF:
PN0637AR1_SCH0004AR0.SCM
SHEET
2 OF 2

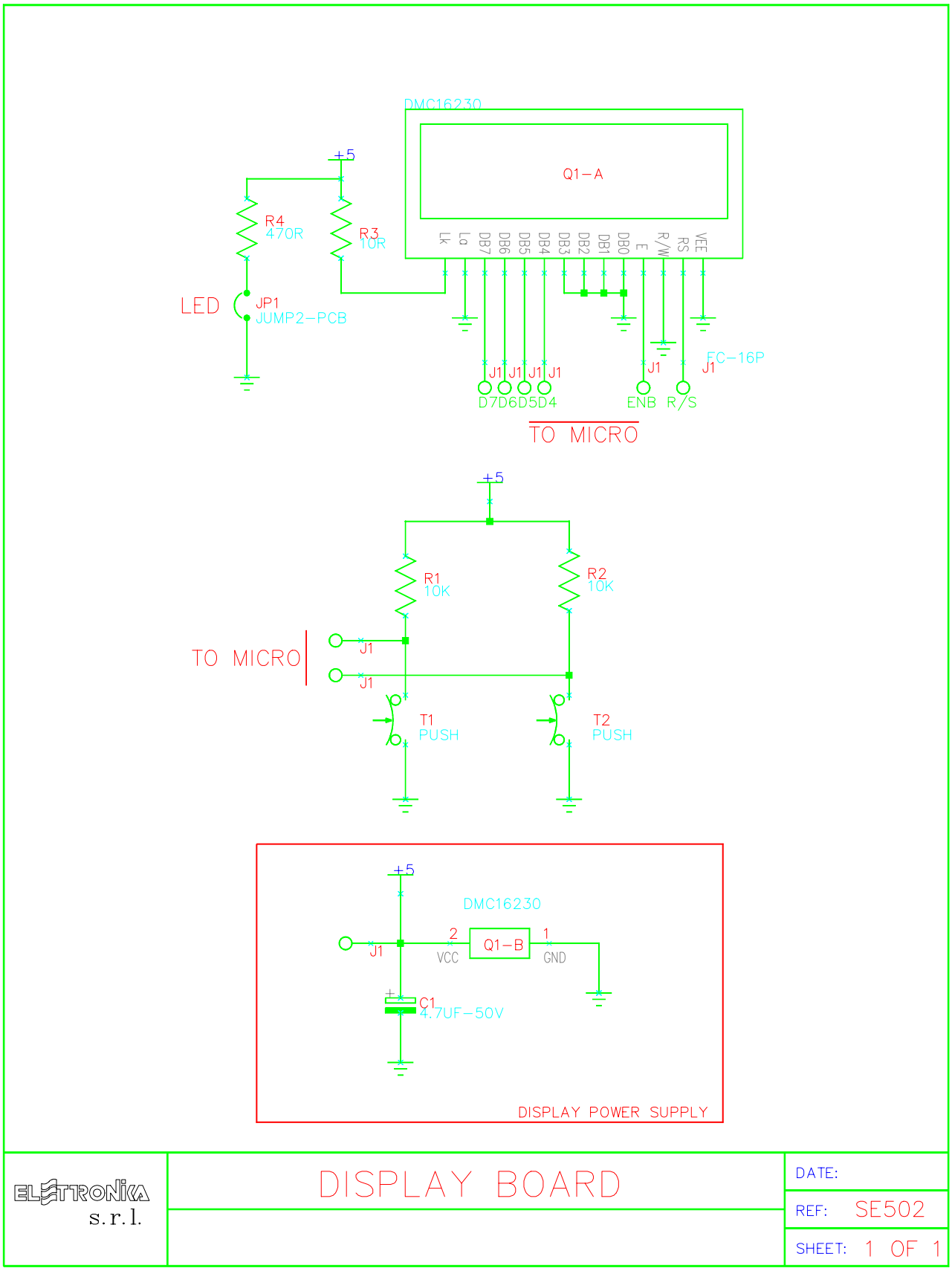
DMC16230
Q1-A
+5
R4
470R
R3
10R
LED
JP1
JUMP2-PCB
Lk
La
DB7
DB6
DB5
DB4
DB3
DB2
DB1
DB0
E
R/W
RS
VEE
J1
FC-16P
D7D6D5D4
ENB
R/S
TO MICRO
R1
10K
R2
10K
T1
PUSH
T2
PUSH
Q1-B
VCC
GND
C1
4.7UF-50V
DISPLAY POWER SUPPLY
ELETTRONIKA
s.r.l.
DISPLAY BOARD
DATE:
REF: SE502
SHEET: 1 OF 1

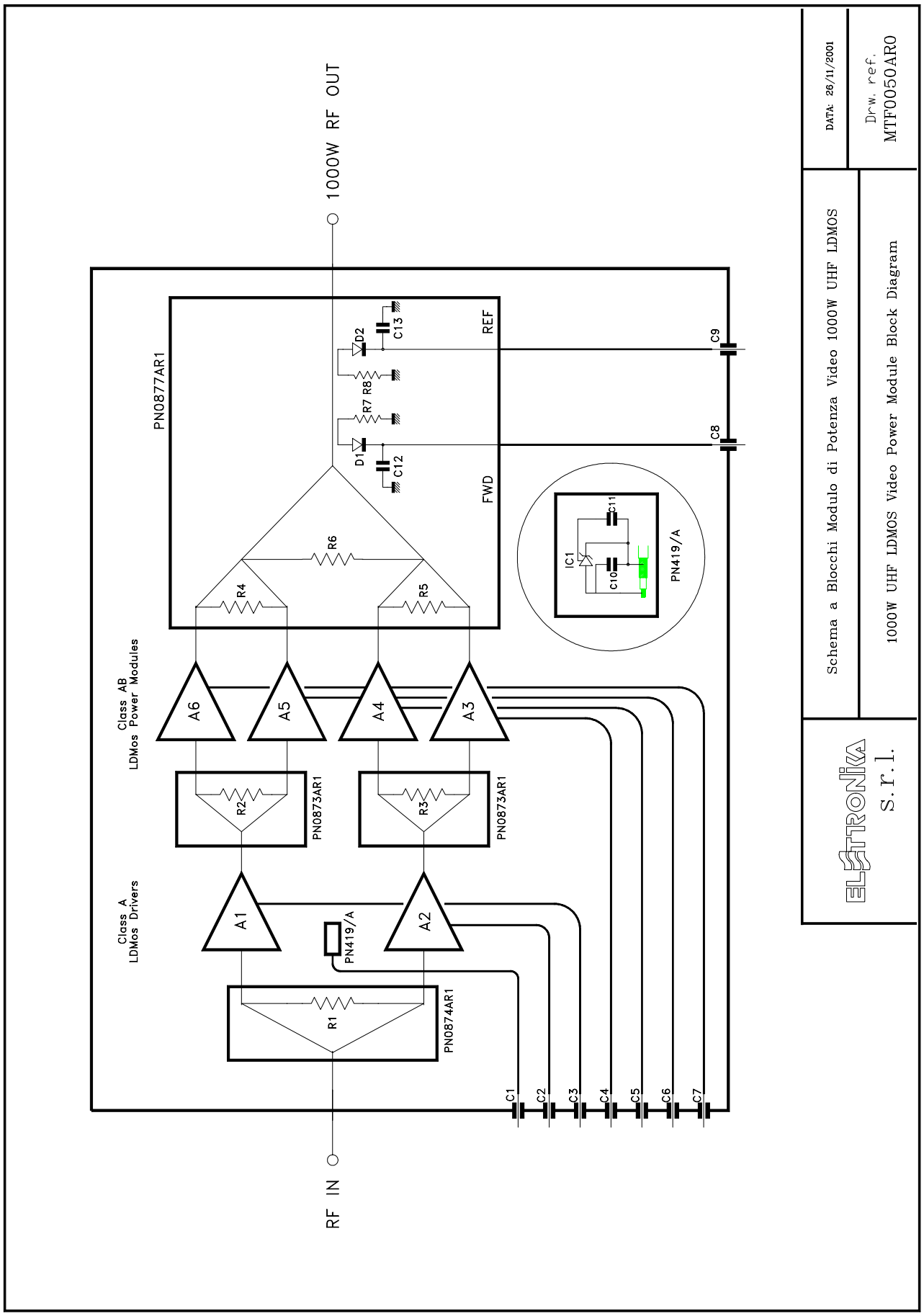
1000W RF OUT
RF IN
PN0877AR1
REF
FWD
D1
D2
R7 R8
C12
C13
R4
R5
R6
C8
C9
IC1
C10
C11
PN419/A
Class AB
LDMos Power Modules
A6
A5
A4
A3
R2
R3
PN0873AR1
PN0873AR1
Class A
LDMos Drivers
A1
A2
PN419/A
R1
PN0874AR1
C1
C2
C3
C4
C5
C6
C7
DATA: 26/11/2001
Drw. ref.
MTF0050AR0
Schema a Blocchi Modulo di Potenza Video 1000W UHF LDMOS
1000W UHF LDMOS Video Power Module Block Diagram
ELETTRONIKA
S.r.l.

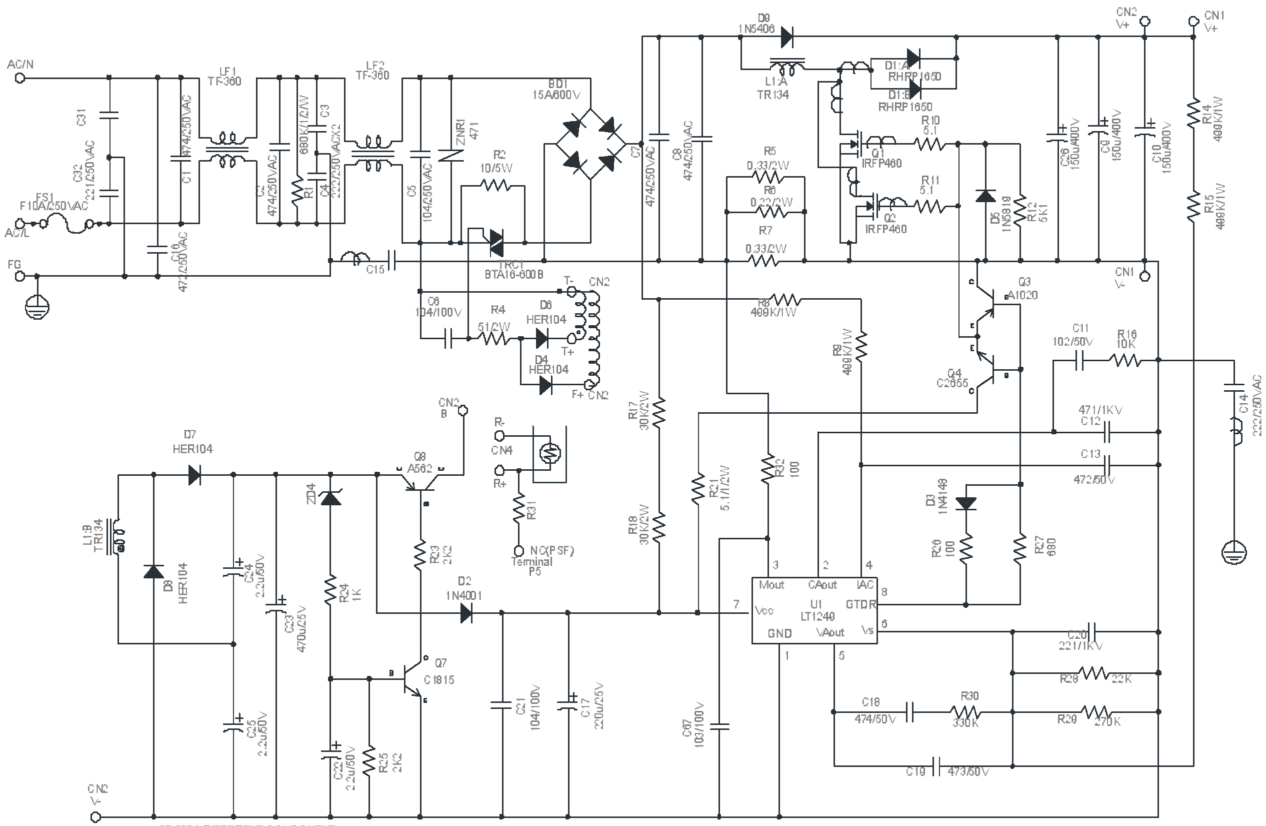

SP-500A DIFFERENT COMPONENT:

PART NO. \ MODEL	12V	13.5V	15V	24V	27V	48V	54AD
R31	X	X	X	X	X	X	1K
ZD4	8.0V	8.0V	8.0V	8.0V	8.0V	8.0V	0.1V/1W

ELETTRONIKA s.r.l.	DESCRIPTION: ELECTRICAL DIAGRAM	DESIGNER	SIGNATURE	DATE 04/09/02
	TITLE: SP-500A-R3 SWITCHING POWER SUPPLY	PCB DESIGNER	SIGNATURE	REF:
CODE		QUALITY CONTROL	SIGNATURE	SHEET 1/2

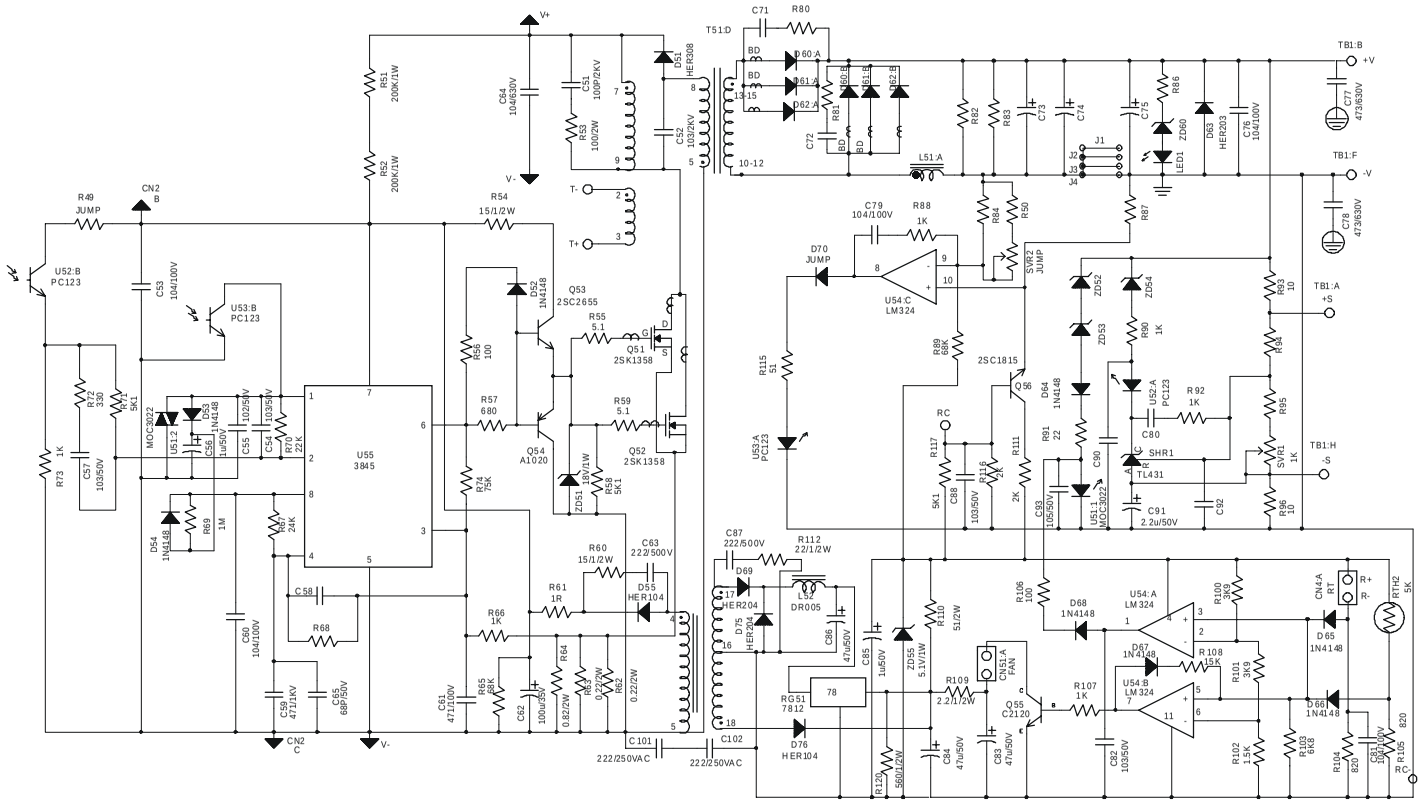

SP-500B DIFFERENT COMPONENT:

PART NO / MODEL	C71,72	R80,81	D60,61 62	L51	R82,83	C73,74 75	R86	R94	R95	C80	R87	T51	1.40 10mm	ZD52	ZD53	ZD54	ZD60	R84	R50	C92			
12V	222 /500V	10/1W	C25P06Q	TR127	220 /2W	1000u /35V	1K	6K8	1K5	1u/50V	910	TF407	J1,J2 J3,J4	12.9V	JUMP	JUMP	5.4V	1K8	10K	X			
13.5V	222 /500V	10/1W	C25P06Q	TR127	220 /2W	1000u /35V	1K	10K	1K8	1u/50V	1K2	TF400	J1,J2 J3,J4	16.1V	JUMP	JUMP	5.4V	1K8	6K8	X			
15V	222 /500V	15/1W	D9202	TR129	270 /2W	1000u /35V	1K	10K	1K5	1u/50V	1K2	TF401	J1,J2 J3,J4	18V/1W	JUMP	JUMP	5.4V	1K5	8K2	X			
24V	471 /1KV	22/1W	D9202	TR130	680 /2W	1000u /35V	2K2	20K	2K	1u/50V	910	TF402	J1,J2 J3	15V/1W	12.9V	12V/1W	10.6V	1K2	10K	X			
27V	331 /1KV	27/1W	D9202	TR131	1K /2W	470u /50V	2K2	24K	2K	224 /100V	820	TF403	J1,J2 J3	18V/1W	15V/1W	18V/1W	10.6V	1K1	6K8	X			
48V	221 /1KV	39/1W	D9202	TR132	3K3 /2W	220u /63V	6K8 /1/2W	36K	1K5	224 /100V	910	TF404	J2,J3	33V/1W	27V/1W	33V/1W	16.1V	820	10K	221/1KV			

ELETTRONIKA s.r.l.	DESCRIPTION: ELECTRICAL DIAGRAM	DESIGNER	SIGNATURE	DATE 04/09/02
	TITLE: SP-500A-R3 SWITCHING POWER SUPPLY	PCB DESIGNER	SIGNATURE	REF:
CODE		QUALITY CONTROL	SIGNATURE	SHEET 2/2