DWG. NO.	SHEET	REV
5200-001363-001	1	1

REVISIONS

REV	DESCRIPTION	BY	DATE	D.E.	M.E.
1	PRODUCTION RELEASE	DT	020711		

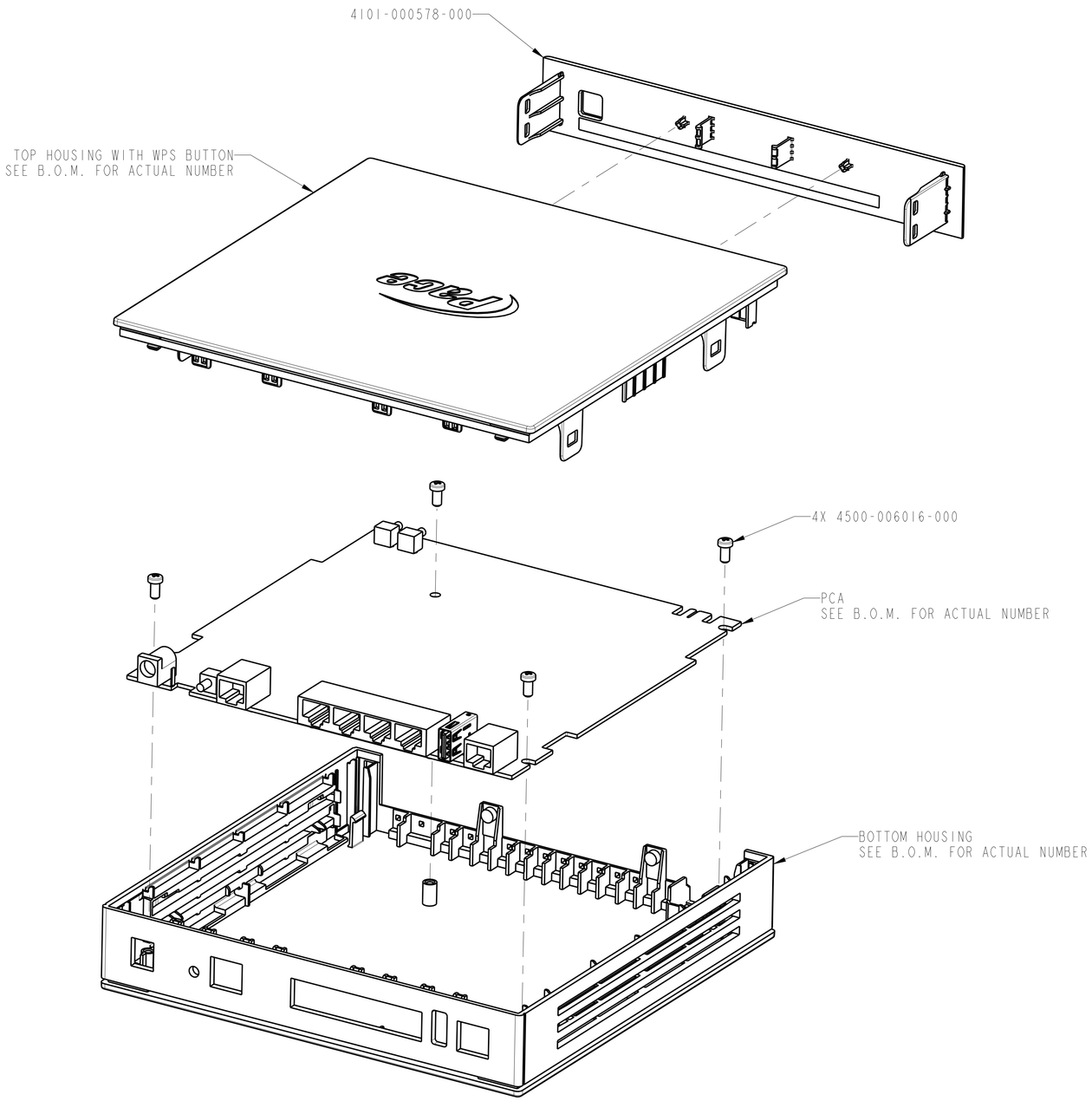

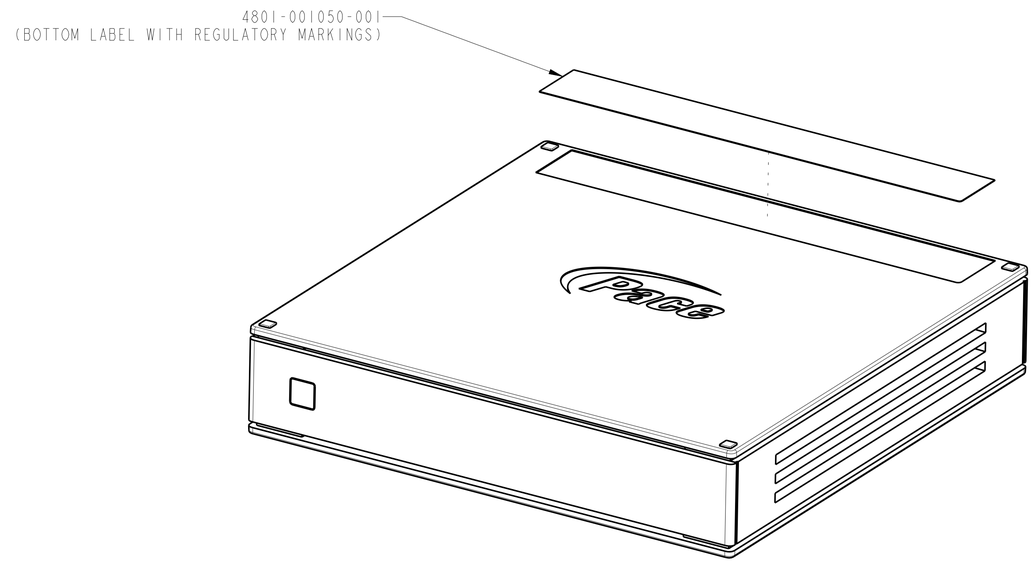

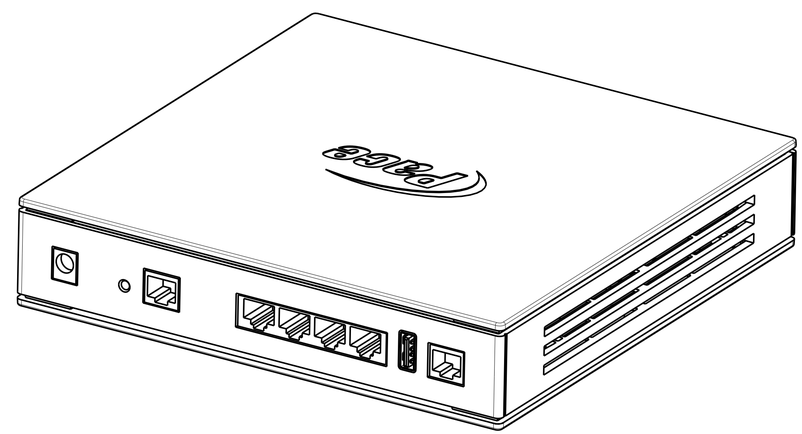

ITEM NO.	REF. DES.	PART OR IDENTIFYING NO.	NOMENCLATURE OR DESCRIPTION	MATL/SPEC

QTY PER VERSION — LIST OF MATERIALS

UNLESS OTHERWISE SPECIFIED

DIMENSIONS ARE IN MM
TOLERANCES ARE:
DECIMALS ± 0.5 — ANGLES ± 0.5°

MATERIAL: N/A

FINISH: N/A

THIRD ANGLE PROJECTION

APPROVALS		DATE
DRAWN BY	D. TRAN	020711
DES.ENG.		
MFG.ENG.		

THIS DOCUMENT CONTAINS CONFIDENTIAL AND PROPRIETARY INFORMATION OF 2WIRE, INC. ("2WIRE"). THIS INFORMATION WHICH SHALL NOT BE REPRODUCED, TRANSFERRED TO OTHER DOCUMENTS, DISCLOSED TO OTHERS, USED FOR MANUFACTURING OR ANY OTHER PURPOSE WITHOUT THE PRIOR WRITTEN PERMISSION CONSENT OF 2WIRE, INCORPORATED.
COPYRIGHT (c) 1998 2Wire, Incorporated

DO NOT SCALE DRAWING

2WIRE INCORPORATED
1704 AUTOMATION PARKWAY
SAN JOSE, CA 95131 USA

DWG, ASSY, MAINSTREAM II, WPS, PACE

SIZE	DRAWING NO.	REV
D	5200-001363-001	1

SCALE 1/1 — FILE — SHEET 1 OF 1